DEPARTMENT OF THE ARMY
CORPS OF ENGINEERS
MISSISSIPPI RIVER COMMISSION

TRAFFICABILITY OF SOILS

PILOT TESTS—SELF-PROPELLED VEHICLES

TECHNICAL MEMORANDUM NO. 3-240

WATERWAYS EXPERIMENT STATION

VICKSBURG, MISSISSIPPI

PRICE $2.00

NOVEMBER 1947

TA7
.W34
no. 3-
240
EQ

DEPARTMENT OF THE ARMY

CORPS OF ENGINEERS

MISSISSIPPI RIVER COMMISSION

TRAFFICABILITY OF SOILS

PILOT TESTS—SELF-PROPELLED VEHICLES

TECHNICAL MEMORANDUM NO. 3-240

WATERWAYS EXPERIMENT STATION

VICKSBURG, MISSISSIPPI

MRC-WES-250-11-47

PRICE $2.00

NOVEMBER 1947

CONTENTS

	Page
FOREWORD	
PART I: INTRODUCTION	
Subject	1
Authority	1
Purpose	1
Scope	2
Previous Investigations	2
Definitions	3
PART II: TEST PROGRAM	
Problems Involved	5
Method of Approach	9
Construction Procedures and Traffic Tests	12
PART III: DISCUSSION	
Methods and Techniques	31
General Trafficability	34
PART IV: CONCLUSIONS	
Methods and Techniques	46
General Trafficability	46
PART V: RECOMMENDATIONS	
TABLES 1-8	
PLATES 1-15	

FOREWORD

This report covers one phase of a comprehensive study to determine the relationship between the trafficability of soils and the mobility of military vehicles. The project was assigned to the Corps of Engineers by the Research and Development Division, War Department, General Staff. The Engineer Research and Development Laboratories has been designated the development agency.

This report will be an appendix to a comprehensive report to be prepared when other phases of the study have been completed. It is presented in this form for restricted distribution so the results can be made available to interested agencies at an earlier date. It is cautioned that later investigations may modify the significance attached to some of the data and even change the conclusions in this report.

In order for the reader to have a better understanding, certain concepts are necessary which are beyond the scope of this particular report. For this reason these concepts are presented here although it is recognized that such a presentation results in a foreword longer than normally used.

The term trafficability has been applied to the capacity of a soil to withstand traffic of military vehicles. The trafficability of a soil for the idealized case is dependent on (a) the soil having sufficient bearing capacity to support the vehicle, and (b) the soil having sufficient traction capacity to develop the resistance between the soil and the tire or track to provide the forward thrust necessary to overcome the rolling resistance. As with all soil problems, the idealized case seldom occurs;

and in the actual case, as soil conditions grow worse and the bearing capacity and traction decrease, rolling resistance increases which creates a complex problem. When the rolling resistance equals the thrust developed by traction between the treads and the soil, the vehicle is immobilized.

It should be noted that in this discussion characteristics of the vehicle were not considered. However, the characteristics of the vehicle are definite factors. In reality the trafficability of any given soil condition is different for practically every vehicle.

Studies available to date indicate that the ability of a soil to develop adequate bearing and traction capacity is primarily a function of the strength or shearing resistance of the soil. The bearing capacity as referred to in this case is the ultimate bearing capacity (defined as total bearing capacity by Terzaghi in "Theoretical Soil Mechanics") and should not be associated with the usual interpretation of bearing capacity as used in building codes which is based on a tolerable settlement. Some of the settlement that occurs under a vehicle may be due to compaction of the soil voids but except in very loose deposits this will be small. The majority of the settlement will be due to plastic flow, and plastic flow is preceded by failure in shear. Thus, the ability of the soil to furnish adequate bearing capacity for a given vehicle is a function of the shearing resistance of the soil.

The behavior of a tire or track in obtaining traction in off-the-road soil conditions is such that the treads dig into the top layer and tend to shear the soil. The ability of the soil to provide traction is directly dependent on the shearing resistance of the soil. Where a thin

layer of very soft weak soil overlies a hard soil, certain types of tires and tracks are not able to dig into the hard soil, and there is an apparent lubricating effect so that no traction is developed. This condition is called slipperiness. It also is a function of the shearing resistance of the weak layer.

Where the bearing capacity is low, the vehicle settles and it is necessary for the vehicle to push soil out of the way in order to move. This increases the rolling resistance. If the layer through which the vehicle settles is soft and has very little shearing resistance, it can be pushed away easily, but if the layer is stiff it adds considerably to the rolling resistance. The increase in effort required to push away soil as the vehicle progresses is also a function of the shearing resistance of the soil.

Under certain conditions some soils are sticky and will adhere to the treads and tires and build up on the track rollers thereby increasing the rolling resistance. This increase in rolling resistance is a function of the ability of the soil to adhere to the vehicle and is called "stickiness" in this report.

It is therefore believed that the trafficability of a soil is dependent directly on the strength of the soil together with its stickiness characteristics. Consideration was given to measuring the strength by a shear test for a rational approach to the problem of predicting trafficability from the results of soil tests, but the application of such results requires a knowledge of the stresses in the soil mass under the load. Accurate information on the stresses is nonexistent, and the time required to develop such knowledge was considered prohibitive.

Studies are under way on the distribution of stresses under airplane wheels which should prove helpful.

Based on this reasoning, an empirical approach to the problem was adopted. An indicator test for the strength of the soil was developed in the form of the cone penetrometer. This instrument furnishes a reading which is an index of the shearing resistance of the soil. For obvious reasons the reading is called a cone index. A good indicator test for stickiness is needed. It is known that stickiness increases as the plasticity of the soil (as measured by Atterberg's plasticity index) increases. An adaptation of Atterberg's stickiness test has been developed to determine when the soil is in the sticky range.

It is considered that the cone index values obtained with the cone penetrometer can be correlated with the ability of the soil to provide the necessary bearing and traction capacity to support the traffic of given military vehicles. It is considered that the stickiness test can be used to predict whether or not stickiness will occur.

The pilot tests reported herein were conducted primarily to develop test procedures and techniques for full-scale tests on self-propelled vehicles. In these full-scale tests, the correlations between the readings from the instruments and the trafficability of the soils are to be developed.

PILOT TESTS -- SELF-PROPELLED VEHICLES

PART I: INTRODUCTION

Subject

1. This report covers a series of tests made as a part of the program to determine the trafficability of soils as related to mobility of military vehicles. The investigation was conducted by the Trafficability Section, Flexible Pavement Branch, Soils Division of the Waterways Experiment Station.

Authority

2. Authority for the tests is contained in the first indorsement from the Engineer Board dated 31 July 1946 to letter from the Experiment Station dated 17 July 1946, subject, "Draft of Plan for Pilot Tests, Trafficability of Soils Project."

Purpose

3. The primary purpose of this series of tests was to establish the most efficient procedures for use in conducting more extensive trafficability tests. Specifically, these pilot tests were initiated to select suitable methods and equipment for processing soil in test lanes and to improve the technique for traffic testing, field soil testing, and collection of data. A secondary purpose was to obtain data on soils and vehicles to be used in the general study on trafficability.

Scope

4. This report presents the results of the tests primarily from the standpoint of their value as "pilot" studies. A large percentage of the data obtained will be useful in the general study on trafficability of soils. A preliminary analysis of these data is included in this report.

Previous Investigations

Field tests

5. Previous investigations along this same general line were made by the Engineer Board at Yuma, Arizona; Salton Sea, California; Camp Hulen, Texas; and Vicksburg, Mississippi. Details of these tests are given in the following reports:

"Trafficability of Soils," 1 September 1945, published by Waterways Experiment Station.

"Investigation of Methods and Equipment for Crossing Artificial Mud Areas," 4 September 1945, Engineer Board Report No. 950.

Laboratory and office study

6. The pilot studies reported herein were preceded by a laboratory and office study conducted to develop instruments or to refine existing instruments for (a) measuring the bearing value and the stickiness of the soil, (b) sampling the soil, and (c) determining the drawbar pull of the vehicles. From the results of the laboratory study two instruments for measuring bearing value were developed. Each instrument had certain favorable characteristics, and it was not possible to select the most desirable one from laboratory tests. One instrument was a cone penetrometer which

was a refinement of the existing cone penetrometer, and the other was a drop cone which was a new development. A spatula test for determining stickiness was also selected in the laboratory study. This test is an adaptation of the Atterberg test for the "sticky limit." In addition, a sampling tube for obtaining density samples and an electrically-operated recording dynamometer were designed and constructed during this phase of the study. Descriptions of these instruments are given in Part II of this report. Details of the laboratory study to develop the instruments appear in the report on the development of instrumentation where the problem of slipperiness of soil is discussed and means for evaluating slipperiness in the field are suggested.

Definitions

7. The following definitions are presented to clarify certain unusual terms that are used in this report:

Trafficability. The capacity of a soil to withstand traffic of military vehicles.

Vehicle mobility. The ability of a vehicle to move or be moved as influenced by the type and condition of the soils and terrain over which the vehicle operates.

Pilot tests. Tests conducted as guides to establish procedures for use in conducting more comprehensive tests.

Drawbar pulls. Tests to determine the maximum load that could be exerted at the drawbar of any given vehicle under a given condition of test.

Dynamometer. An instrument for measuring power as applied in drawbar pulls.

Cone penetrometer. An instrument consisting of a 30° cone of 1 sq in. projected area, mounted on a shaft and attached to a proving

ring in such a way that it can be used to obtain the cone index of soils.

Drop cone. An instrument consisting of a 30° cone of 1 sq in. projected area, attached to a piston which is dropped a predetermined height and penetrates the soil. It is used to obtain bearing values of soils.

Cone index. A dimensionless number representing the resistance of a soil as measured by the cone penetrometer.

Bearing capacity. Ability of a soil to support a vehicle without undue settlement.

Traction capacity. Ability of a soil to provide sufficient resistance between the soil and the tread to furnish the necessary forward thrust.

Stickiness. The ability of a soil to adhere to vehicles under various conditions.

Slipperiness. The condition of a soil which results in a decrease in the traction capacity due to lubrication of the soil or tractive surfaces usually by water or very soft mud.

Contact pressure. For tracked vehicles, the weight of the vehicle in pounds divided by the area of the vehicle in contact with the soil in square inches. For tired vehicles, the contact pressure is considered equal to the inflation pressure plus the number of plies in the tires.

Rifle Range site. An area of clayey silt approximately 3 miles southwest of the Experiment Station where trafficability tests were made.

Mound site. An area of buckshot clay approximately 4 miles west of the Vicksburg bridge where trafficability tests were conducted.

Pulvimixer. A machine utilizing a series of teeth or tines mounted on a rotor and inclosed in a hood used to pulverize and mix soil in place.

Tow load. A constant load applied at the drawbar of a tractor being tested.

PART II: TEST PROGRAM

Problems Involved

8. In the analysis of data accumulated in the previous investigations considerable difficulty was encountered in obtaining consistent relationships. A part of these inconsistencies was attributed to the methods and techniques used in processing soil in the test areas, in conducting the tests, and in making test measurements and other observations. It was these inconsistencies that led to the decision to conduct pilot tests to perfect techniques before going into extensive trafficability studies. Features that were to be studied are discussed in the following paragraphs.

Processing soil in test areas

9. One of the basic facts determined in previous investigations was that the determination of the variation of cone index with depth is a necessity in the prediction of the ability of vehicles to pass over a given area. In the analysis of previous data it was sometimes difficult to evaluate the cone index at critical depths because of the manner in which the lanes were processed. A three-toothed rooter had been pulled through the area leaving an uneven bottom, and since the cone penetrometer reading by chance could have been made in a tooth mark or not, evaluating these data was very difficult. For this reason it was desired to perfect a method of construction that would produce a lane having a uniform bottom which could be readily detected. It was

also desired that the method be adaptable to constructing lanes where the thickness of processed material would be substantially greater than any critical depth at which a vehicle would bog down.

10. In the tests at Yuma the lanes were tested in a flooded condition with a few exceptions. In the tests at Vicksburg a step forward was made in that lanes were tested in the flooded state after having been dried back approximately 1, 6, and 11 days. This procedure gave a reasonable range of conditions; however, it was desired to perfect a procedure whereby a test lane could be constructed to meet a given condition of moisture content, density, or cone index so that lanes could be produced which would just fail to pass, just pass, or pass a vehicle for a considerable number of passes.

11. In the tests at Vicksburg a few tests were made on slope sections. It has been recognized that comparative tests on level and slope sections should be made; however, no satisfactory means of constructing slope sections to produce soft wet conditions has been devised.

Conducting tests

12. In previous tests the lanes had been very narrow, or where wide lanes were used several vehicles were run in the same lane. In some cases vehicles were run in lanes which had suffered from the results of tests conducted on the sides. Also dikes used to impound water sometimes caused failures at the entrances and exits to the test lanes. The procedures for operating traffic also varied considerably. In some instances the vehicles were operated back and forth in the test lanes. In others they were driven out, turned, and driven back through the lanes. While

these variables may have caused only minor differences in the final results it was desired to standardize on a practicable system.

13. One variable that did affect the test results seriously was the method of obtaining drawbar pulls. In most instances the drawbar pulls of the tractors were taken from a standing position whereas in the case of the trucks, the vehicles were pulled down to a stop. The effect of this was apparent in that the tractor data were more consistent than the truck data. An explanation is that the inertia of the truck was converted into drawbar pull as the truck decelerated. Since the deceleration was not constant, this caused varying drawbar pulls under apparently equal soil conditions. It was desired to perfect a method of obtaining drawbar pulls that would give consistently reliable results and which would represent the critical condition.

14. One other feature in the conduct of the tests that warranted study was the method of applying tow loads to tractors. In the previous tests, tractors were tested while pulling some type of towed vehicle such as an Athey wagon or a toboggan type sled. This was undesirable because the resistance applied by the load varied as the lane deteriorated, and it was difficult to evaluate the maximum load that the tractor could tow. Also it was not possible to determine what the behavior would have been if the tractor had been towing a lighter or heavier load. It appeared that a method should be devised to apply tow loads that would remain reasonably constant throughout the traffic test. The method should also permit application of tow loads of different magnitude so that a tractor could be tested under more than one tow load. Under this method the behavior of the tractor could be evaluated for various tow loads, and the

resistance offered by towed vehicles (which is another problem to be handled in other studies) could be fitted with tractor performance to predict behavior of a tractor under actual conditions.

Drawbar pulls

15. Previously, drawbar pulls had been determined by use of a Chantillion dynamometer equipped with an indicator hand and a dial graduated to 50,000 lb. This was unsatisfactory because: (a) the technician reading the instrument had great difficulty in differentiating between surges and normal pulls; (b) the indicator hand vibrated to such extent that average readings could be estimated with only a low degree of accuracy; (c) the instrument was too delicate to stand the severe usage, requiring frequent repairs and causing delays in testing; and (d) the reader was required to stand in a location made dangerous by the possibility of a break in the cable (two cables were broken in the 1945 tests at Vicksburg, but luckily no one was injured). A recording dynamometer was developed in laboratory studies in the first half of 1946; however, it was desired to test this instrument in pilot studies prior to any extensive field tests.

Observations

16. The previous investigations were conducted so rapidly that no time was available for training technicians and as a result the observations of causes of immobilization and conditions of the test were sketchy and insufficient. It was desired to train technicians in making observations and to develop forms for recording them. Also, methods of measuring the depth of ruts created by the traffic were not sufficiently accurate

to permit evaluation of the behavior on the basis of variation of cone bearing with depth taken prior to traffic. It was desired to develop a method of determining the depth of rut accurately and rapidly.

Soil tests

17. In general it is considered that determinations of the moisture content, dry density, stickiness, and cone index are needed before, during, and after traffic in order to provide proper information for analysis. In addition, classification tests (grain size and Atterberg limits) on representative samples are required. In the tests at Yuma, Salton Sea, Camp Hulen, and Vicksburg (in 1945), moisture content and cone index determinations were made although the number was limited. Classification tests and limited studies of stickiness and slipperiness were made but no density determinations were made. It was desired to develop procedures of sampling and testing to assure representative values, to train technicians, and to devise forms for recording the data.

Soil testing instruments

18. In the laboratory work done at Vicksburg in 1946, the soil testing instruments were thoroughly tested; and two instruments to measure the soil strength, a cone penetrometer and a drop cone, a stickiness indicator and a sampler for obtaining density samples were selected for possible field instruments. It was desired, however, to test these instruments in pilot tests before going into extensive trafficability studies.

Method of Approach

19. The method of approach used in this study was to select four

vehicles with desired representative characteristics, construct lanes on two different soil types, make the necessary tests and observations, and apply traffic with the vehicles. This method gave opportunities to study, revise, and perfect each phase of the construction and testing procedures. In addition, it yielded a considerable amount of information for the general study on trafficability of soils and the classification of military vehicles.

Vehicles

20. Three vehicles were selected in order to obtain vehicles that would be representative of the major classes. A D-7 tractor, a 2-1/2-ton 6 by 6 cargo truck, and an LVT-4 landing vehicle were selected. In addition, the M29C Weasel was added to the test program. On plate 1 are shown photographs of the vehicles used in the tests. Characteristics such as weight, tire, and track characteristics are given in the tabulation below.

Vehicle	Weight in Pounds	Tire Size	Width of Track	Length of Track	Contact Pressure PSI
D-7 Tractor	30,090	--	1 ft 8 in	8 ft 3 in	7.6
2-1/2-Ton Truck	21,600	10.50 x 18	-	-	22.0 (1) 26.0 (2)
Weasel, M29C	5,840	--	1 ft 9 in	7 ft 4 in	1.6
LVT-4	33,800	--	1 ft 2 in	14 ft 0 in	7.2

(1) At Rifle Range site
(2) At Mound site

The tests at the Rifle Range site were conducted using emergency tire inflation pressure of 12 psi. Near the end of the tests a flat tire

occurred on the truck and during repairs several broken places were noted in the tire carcass. It was apparent the duration of the traffic in the tests was too long for emergency pressures. Accordingly, in the tests at Mound the sand and mud limited operation inflation pressure of 16 psi was used. Since the tires were 10-ply, the indicated contact pressures were 22 and 26 psi, respectively.

Soils

21. Two locally available soils furnished materials in the desired range. One of the soils is a clayey silt available at the Rifle Range site near the Experiment Station. This soil has a liquid limit of 39, a plasticity index of 14 and is classified ML by the Corps of Engineers classification. Plate 2 shows a grain-size curve of this material. Previous experience had indicated this material would pulverize quite easily when processed. The other soil is a heavy buckshot clay available at the Mound Site across the Mississippi River from Vicksburg. This material has a liquid limit of 62, a plasticity index of 38 in the area in which the tests were conducted and is classified as CH by the Corps of Engineers classification. A grain-size curve of this soil is also shown on plate 2. Previous experience indicated that this material would be very difficult to process.

Test areas

22. At the Rifle Range site seven test lanes 100 ft long and 20 ft wide were constructed. Turnarounds common to all lanes were provided at the ends. At the Mound site lanes were constructed similar to the ones at the Rifle Range except that the dikes between the test lanes were

widened to 15 ft and later to 20 ft to provide work areas. Plate 3 is a sketch of the test lanes at each site.

Construction Procedures and Traffic Tests

23. The traffic tests conducted at each site are listed in the table below. Tests were started in July 1946 and completed in November 1946.

Vehicle	Site	Number of Traffic Tests Conducted		
		Bearing Value	Stickiness	Slope
D-7 Tractor	Rifle Range	8	-	-
	Mound	4	1	1
2-1/2-Ton Truck	Rifle Range	8	2	1
	Mound	5	3	1
Weasel M29C	Rifle Range	7	2	-
	Mound	2	4	-
LVT-4	Rifle Range	3	2	1
	Mound	4	3	1

The results obtained with regard to construction and testing procedures are discussed in paragraphs 24-53. Data on soil characteristics and behavior of vehicles, which are pertinent to the general study on trafficability of soils and classification of vehicles, are presented in tables 1-8.

Processing soil

24. Rifle Range site. In the initial phases of the project it was decided to construct lanes with the soil processed in about 4 or 5 increments of moisture content covering the range from just below the plastic limit to about the liquid limit. In the Rifle Range material moisture contents from 23 to 39 per cent were desired, since the plastic limit was

25 per cent and the liquid limit 39 per cent. It was felt that this would provide lanes that would permit continuous traffic, limited traffic, and no traffic for all four vehicles being tested. It was desired to determine if a lane processed with ordinary construction procedures without removing the material would be satisfactory. It was felt that ordinary procedures would be satisfactory for the lower moisture contents. Accordingly, construction on two lanes was started, one with a moisture content of 23 per cent and one with a moisture content of 27 per cent.

25. Construction of these test lanes was accomplished in the following manner. A lane containing the test soil was shaped to the finished grade. Breaking up and pulverizing the soil in place in the lane was accomplished with a three-toothed Killifer rooter with a working depth of 15 in. and a spring-tooth (19 teeth) Killifer plow having an effective plowing depth of 11 to 12 in. Several passes of each were necessary. Finally a pulvimixer which penetrated to a depth of 9 or 10 in. was employed. This procedure left the material in a well-mixed state for a depth of 12 in., with the top 9 or 10 in. in a somewhat more thoroughly mixed condition than the bottom 2 or 3 in. A predetermined quantity of water was then added to the lane with a sprinkler truck and the process was repeated. Final operation consisted of compacting the lane with one coverage of a D-4 tractor in an attempt to obtain a low density.

26. In general the drier lane constructed in this manner was satisfactory from the standpoint of uniformity, although the compaction was too great. However, difficulties were experienced in the lane with 27 per

cent moisture, indicating the construction methods outlined were not suited to material this wet. It was apparent that other methods would be necessary for the wetter conditions; also, the depth of processing was not adequate to cause immobilization except in a few isolated cases. Since the methods tried in these two lanes could not be used for lanes with greater depth, other methods were necessary to process deeper lanes.

27. In attempting to construct lanes to a greater depth, it was learned that time could be saved and efficiency increased by excavating material, spreading it out in an adjacent work area, working it thoroughly with the spring-tooth plow and the pulvimixer, and allowing it to dry out as much as practicable before hauling it to the lane. It was also found advisable to devise a method of adding water to a lane without using the truck, since the truck frequently stalled in the lane and had to be pulled out, and also because compaction of the material by the truck was not desired. Accordingly, a sprinkler pipe long enough to wet the whole width of the lane and light enough to be carried by two men was used.

28. To construct a 24-in.-deep lane in the 24 to 27 per cent water content range, the following procedure was employed. Material to a depth of 26 to 27 in. below the surface was removed and spread out on the stockpile to dry. A 9-in. lift of dry material already thoroughly mixed as described above was placed in the lane with a scraper and a measured amount of water was added with the sprinkler pipe. The spring-tooth plow and the pulvimixer, in turn, were then used to mix the water and the soil. A second 9-in. lift was then deposited on the first, and the three-toothed rooter was drawn through the lane several times by the D-4 tractor to destroy the compaction effects of the scraper on the first

lift. The materials were again watered and the lightest tractor capable of pulling the spring plow and the pulvimixer (a D-4 tractor) was used to pull these plows through the lane. Compaction was kept within the desired range in this manner. A third, and final lift, was then added and processed in the same manner. The lane was then smoothed over by back blading with a bulldozer on the D-4 tractor. Fairly uniform lanes were constructed in this manner.

29. To construct lanes with material containing more than 27 per cent moisture, the following procedures were devised. Material already dried out and pulverized as much as practicable was hauled into the lane. In some instances it was necessary to use the scraper as it was the only hauling equipment available. When the scraper was used the material was placed in 9-in. lifts. The Killifer rooter was used on each lift to break up compaction caused by the scraper. When the lane was up to the desired grade, dikes were constructed at the ends and the lanes flooded with a 2-in. diameter hose. Flooding was stopped when 2 or 3 in. of standing water had accumulated on the surface. Lanes were allowed to soak for two or three days, then drained of free water and allowed to dry or cure. Depending upon the conditions desired, two to seven days were necessary for the drying-back period. During periods of hot sun and wind the lanes were covered with PBS to prevent dry crusts forming on the surface. This method produced test lanes that were reasonably uniform.

30. During construction of the lanes by any of the methods described, it was found expedient to use a cone index control rather than a water content or density control, since it was easier and faster to

take cone penetrometer measurements than it was to remove samples and weigh and dry them. A laboratory curve of cone index versus water content, shown on plate 4, proved useful in this connection. This curve was developed in tests on laboratory-compacted specimens. The method of testing is given in the report, "Laboratory Tests to Determine Effect of Moisture Content and Density Variations on the Trafficability of Soils." As a further development, conditions required to produce vehicle immobilization or just permit passage were estimated, and an attempt was made to process lanes to meet these conditions. In general, this was satisfactory; but in the later stages of the test, weather conditions prevented drying back some of the lanes to the desired conditions.

31. Mound site. Work at the Mound site was commenced after work at the Rifle Range had been in progress for several weeks. Experience at the Rifle Range indicated that it would be desirable to keep all construction equipment off the lane during the processing stages.

32. After the area was stripped of extraneous matter, lanes of the same dimensions as those at the Rifle Range were laid out. However, instead of 5-ft wide dikes, dikes of 15-ft width were provided at Mound. Later the width was increased to 20 ft. To construct a lane in the drier condition (with water contents less than 42 per cent), the following procedure was used. The lane was excavated to the desired depth and material already dried and worked to a pulverized condition was deposited uniformly on the 15-ft wide dike adjacent to the lane being constructed. When enough material to provide a 6-in. lift in the lane was accumulated on the dike, it was placed in the lane using a 3/4-cu yd clamshell bucket on a small crane. Material was spread as uniformly as possible with this

equipment and was kept at the desired grade by laborers using shovels and rakes. When the 6-in. lift was completed, a water truck with a side arm sprinkler pipe which extended to the center of the lane was driven along the dikes on each side of the lane until the required amount of water was added. This procedure, hauling from the stockpile to the dike with a scraper, placing a lift in the lane with the clamshell, and wetting the lane with a side arm water sprinkler, was repeated until the final grade desired was reached. It was found that for lanes of less than 35 per cent water content a 6-in. lift was too deep for the water to penetrate to the bottom of the lift, but good results could be obtained by using 4-in. lifts and allowing a two to four day period for the lane to cure and the moisture to penetrate the full lift. Lanes constructed by this method were fairly uniform in moisture content, density, and cone index and were considered satisfactory.

33. To construct lanes of material containing more than 42 per cent water, it was found expedient to place all the material for the entire lane in the dry state, flood, and then allow it to dry back and cure to the desired conditions. Dry pulverized material was placed to grade in the previously-excavated lanes by using dump trucks which backed up to the center of the lane, dumped the load, and pulled forward out of the lane without the necessity of traveling over the processed soil. It was found that the driest, most finely pulverized material produced the most uniform lanes. A dry soil soaks up water rapidly, much more rapidly than a moist soil. The moisture content of the dry soil used in most of the lanes averaged 17 to 18 per cent. In some cases material with a water content as high as 22 per cent was used, but results were not quite as

good. This method of processing produced satisfactory lanes and was considerably faster than the procedure used for the drier lanes except for the period of dry-back. More time was required to dry back the lanes at the Mound site than at the Rifle Range site. Part of the additional length of time is attributed to the soil; however, a good portion was due to the fact that the winter season was approaching and the rate of evaporation was slower.

34. Cone index values were used in controlling construction at the Mound site in the same manner as they were used at the Rifle Range site.

35. Slope sections. Sections with 5 and 6 per cent slopes were constructed at the Rifle Range and Mound sites, respectively. The soil on these slope sections was processed similar to the manner described in paragraphs 28 and 32 for the drier soils. No difficulty was experienced. Due to the lack of time, no attempt was made to process a wet soil on a slope section.

Traffic testing

36. Bearing and traction capacity test procedures. In the tests conducted to determine bearing and traction capacity requirements, traffic was applied in lanes that had been processed to produce as nearly uniform conditions for the full depth as possible. Vehicles that had only one or two reverse gear ratios, namely, cargo trucks and Weasels, were driven forward over the test lanes, then turned on the turnaround areas and driven over the lanes in the opposite direction, still traveling forward. In this manner, speeds comparable to those used in actual

service could be obtained. The D-7 tractors have very nearly the same gear ratios in reverse as they have forward. Hence, considerable time was saved by driving them forward and then backward over the test lanes without turning them. The LVT-4 did not have suitable reverse gear ratio for the higher speeds but could be operated both backward and forward at slow speed. Traffic was continued until the vehicle became immobilized or until it became evident that it could operate for an indefinite period of time. In the first tests traffic was continued until 1000 passes had been completed, but it soon became evident that this number of passes was not necessary to determine if the vehicle was going to be immobilized. Usually immobilization occurred in a very few passes, if at all, and by 40 passes it was evident whether traffic was improving soil conditions or making them worse.

37. Because of the cost involved in processing test lanes, consideration was given to the re-use of lanes after tests had been conducted; however, the re-use of test lanes generally was not satisfactory. An attempt was made to reprocess a partially disturbed lane, but the finished result was not very uniform. However, where failure occurred when a vehicle first entered the lane, the other end of the lane was used with success. Also, since the test lanes were 20-ft wide, it proved feasible to conduct two tests with narrow vehicles like the Weasel (M29C) on one lane. Where the soil was not too badly disturbed during the first test, it was found that one test could be made with a comparatively narrow vehicle (2-1/2-ton, 6 by 6 cargo truck) and then another test could be made with a vehicle having much greater distance between tracks (LVT-4) on the same lane. In most cases the second test was used only to obtain

information for estimating the conditions required to pass or immobilize the vehicle so that a new lane could be processed to the desired condition.

38. Stickiness test procedure. Although stickiness was probably a factor in producing immobilization in the tests conducted to determine bearing value requirements, it was not possible to isolate the factor in a lane processed uniformly with depth. This feature can best be studied where there is a hard layer adequate to support the vehicle overlain by about 4 in. of sticky soil. No lanes were processed for this condition; however, on several occasions the ground surface of the turnarounds and the borrow pits was rendered soft and sticky to a depth of about 4 in. by rains. When this occurred, the vehicles were run on these areas outside the test lanes. Traffic was applied similar to the tests for bearing value except that the vehicle traveled forward at all times as backing the vehicle cleaned off the mud. Criteria for stopping traffic was the same as for the other tests except that it was possible in some cases to determine in a very few passes that the soil was not adhering to the tracks and that traffic could continue indefinitely. For this reason traffic was not always continued beyond 40 passes.

39. Slope test procedures. In the slope tests, traffic was continued for only a very few passes as these tests were conducted only to determine the difference in the maximum drawbar pull on level and on slopes.

Drawbar

40. Maximum drawbar. After a review of the various methods of taking drawbar pulls, it was decided that the drawbar pull a vehicle

could exert from a standing condition was applicable to this particular problem. The problem of the drawbar pull that a vehicle can develop at various speeds falls in the scope of vehicle design and is being handled by others. The problem here is to obtain information by which the load a vehicle can tow when the going is bad can be estimated. It is recognized that a vehicle can tow a greater load if it gets a start on good ground and keeps moving than it can if it has to stop and start again. However, in the movement of military vehicles it cannot be assumed that they can traverse the area without stopping. In fact, the only safe assumption is that the vehicle may be stopped.

41. All drawbar pulls were measured with a dynamometer constructed at the Waterways Experiment Station. Plate 5 shows details of the device. It is essentially a steel bar with electrical strain gages attached to the bar. Strain in the bar causes a change in the resistance of the strain gages which is recorded with a Brush type oscillograph. The maximum drawbar pull which each vehicle could exert on smooth, level ground was measured before tests were conducted with the vehicle. This was accomplished by anchoring the vehicle through the dynamometer with a length of cable and having the operator apply power gradually until the treads of wheels slipped or until the motor was stalled. When a test was started, the vehicle was driven onto the test lane and the maximum drawbar pull it could exert on the processed soil was measured in the same manner. These measurements were repeated at intervals as the test progressed and soil conditions changed under traffic.

42. Applying tow loads to tractors. At the beginning of the tests the towed load for the D-7 tractors consisted of a train of two Athey

wagons loaded to a gross weight of 19,000 lb each coupled directly to the tractor. This proved to be an unsatisfactory load because: (a) the broad, comparatively smooth treads on the Athey wagon tended to smooth out ruts made by the tractor treads and thus improve the test lane; (b) the Athey wagons were easy to tow and imposed very little drawbar load on the tractor where the soil was comparatively firm and before ruts were formed; however, as the lane became softer and rougher under traffic the drag imposed on the tractor increased rapidly; (c) in lanes where the soil was soft and sticky, mud piled up ahead of the tracks and tended to make them skid rather than roll so that the imposed drawbar load was very high; and (d) if the tow load was not adequate, no alternate load was possible making it extremely difficult to evaluate the effect of tow load on the tractor's performance throughout any test.

43. To eliminate this varying drawbar load, a plan was evolved whereby other D-7 tractors were towed by means of long cables which allowed the towed tractors to remain on the uniformly smooth turnaround areas at all stages of the test. As the tractor under test passed over the test lane forward, it towed a second tractor forward over one turnaround area. As it passed over the test lane backward, it towed a third tractor backward over the other turnaround area, while the second moved back under its own power to its original position. This process was repeated throughout the test without necessity for turning any of the tractors. Plate 6 shows how the tractors were arranged for this work. The operators on the tractors moving back across the turnarounds were careful to drive at such speed that no assistance was given to the tractor under test. By operating the towed tractor with: (a) the master

clutch disengaged; (b) the master clutch engaged, but gears in neutral position; and (c) all clutches engaged and gears engaged at different ratios and with throttle set at idling speed almost any desired drawbar load could be imposed on the towing tractor. This load could be further regulated by varying the tension in the treads of the towed tractors. This procedure was used to adjust the two towed tractors to give approximately equal loads. By using the two towed tractors in this manner, it was possible to maintain reasonably constant loads as the test progressed regardless of changing conditions in the lane.

44. Drawbar measurements. Plate 7 shows a typical recording for a maximum drawbar pull and for a tow load. The upper part of the sheet shows the maximum pull and the lower, the tow load. The recording is made on a strip of paper as it passes under the pen of a Brush type oscillograph. This pen vibrates with the current cycles. When there is no load on the dynamometer, the vibration is very small and the pen draws a small line near the center of the strip. As load is applied to the dynamometer, the resistance of the strain gage changes and the pen vibrates over a wider arc. The width of the arc is proportional to the change in resistance in the strain gages attached to the dynamometer which in turn is proportional to the load applied to the dynamometer. The ratio between resistance and load remains constant for any one dynamometer; in tests 3-1 and 4-2, shown on plate 7, different dynamometers were used. However, the ratio between the resistance and the width of the arc will vary with changes in voltage. For this reason, a fairly uniform voltage is necessary. To provide a means of calibrating for different voltages at the start and end of each test, a calibration is

recorded on the strip by introducing a known resistance into the circuit, This is illustrated by test 4-2 in the lower part of plate 7 (a before-test calibration was made for test 3-1, but it is not shown). At the start of the test a known resistance which was proportional to a load of 12,500 lb on the dynamometer was introduced in the oscillograph circuit. This resistance caused the pen on the oscillograph to vibrate through an arc equal to 11.7 divisions on the paper. The dynamometer was then switched into the oscillograph circuit and the D-7 tractor pulling another D-7 tractor was started. Two surges occurred in starting after which the pull settled down to a reasonably constant value. The change in resistance in the strain gages on the dynamometer under this tension caused the pen on the oscillograph to vibrate through an arc equal to 9.9 divisions on the paper. After the tractors were stopped, the load fell off and the pen again produced a line. Immediately after the pull was made, the known resistance was placed back in the circuit. The calibration at the end of the pull gave the same value as that at the start of the pull indicating that the voltage was constant during the pull. The pull in pounds that was applied during the test is determined by comparing the width of the arc during the test to the width of the arc under a calibration resistance which is equal to a known load. For test 4-2 illustrated on plate 7

$$\frac{\text{Pull in lb}}{9.9} = \frac{12{,}500 \text{ lb}}{11.7} \qquad \text{Pull} = 10{,}600 \text{ lb.}$$

It is noted on plate 7 that in both the maximum drawbar pull and the record of the tow load, surges occurred especially in the initial phases of the recording. These surges have been disregarded and

reasonable values used in the summaries of test results.

45. As shown above, a circuit with a reasonably constant voltage is necessary when the Brush type oscillographs are used. Attempts were made to use portable generators, but the voltage fluctuations were too great and it was necessary to use commercial power.

Observations

46. Complete and detailed observations were made of every feature of testing deemed necessary. The behavior of the vehicle, its difficulty or ease in traveling, the manner in which material was picked up and amount of material picked up by the wheels or tracks, the amount of material retained on the wheels, tracks, or body, the necessity for shifting gears, and other points of interest were observed by technicians and carefully noted. The change in physical features of the lane itself was frequently measured and recorded. To accomplish this, cross sections were taken at the fifth points of a lane where the lane was fairly uniform, or at intervals where significant changes occurred, and profiles were made along each rut created by a vehicle with readings at intervals of 4 ft or less. Readings were made prior to traffic and at intervals during traffic. A specially designed level rod, graduated both plus and minus from zero in inches and tenths of inches and having the zero adjustable to the height of the instrument, was used. This made it convenient to show elevation in the lane as distance in inches above or below an arbitrary datum plane, and simplified the computation of comparative changes in elevation at any given point or points in the lane.

Soil tests

47. Procedures. Soil tests conducted in connection with the traffic

tests consisted of cone index, density, moisture, and stickiness determinations. Cone index determinations were made using a cone penetrometer with a 1 sq in. (projected area) cone. Plate 8 is a photograph of the cone penetrometer and plate 9 shows construction details. Readings were made by forcing the cone into the soil to the desired depth, releasing and slowly reapplying the load, and noting the load at which the cone just starts moving. Comments on the operation of this instrument are presented subsequently. Density determinations were made from cylindrical samples of known volume obtained with sampling tubes described subsequently. The weight of these samples was determined and the unit wet weight computed. Moisture determinations were made by weighing small (approximately 100 gram) samples of the density samples before and after drying in an oven controlled at 105° C. The moisture content is expressed as a percentage of the dry weight. The unit dry weight was computed from the unit wet weight and the moisture content. Stickiness determinations were made by drawing a stainless steel spatula over the surface of the soil. If no soil adhered, the stickiness was noted as "none"; if some soil adhered but areas of the spatula were still exposed, stickiness was noted as "some"; if the soil completely covered the face of the spatula, stickiness was noted as "complete". Plate 10 shows the three degrees of stickiness.

48. Number of tests. In the first series of tests conducted in the pilot studies very complete sets of cone index, moisture, and density tests were made before traffic and during traffic. Cone penetrometer readings were made at 8-ft intervals in both tracks on the surface and at 6-in. intervals of the processed depth. In addition, readings were made at the surface every 4 ft along both tracks. A typical set of cone

index values is shown on plate 11. Moisture, density, and stickiness determinations were made at 6-in. intervals of depth every 8 ft along both tracks and at the surface every 4 ft. This gave approximately 100 cone index density, moisture, and stickiness determinations for each series of observations. These were made before the start of traffic and at intervals during traffic. This number of determinations was more than adequate to establish the characteristics of the test lanes. In the later tests, the number of density and moisture determinations was reduced as they required considerable time and delayed traffic testing.

49. Results. The results of tests are summarized as average values in tables 1-8. In general, the values shown are numerical averages of all tests. However, where immobilization occurred and conditions were not uniform, the values represent the immediate area where immobilization took place. The nomenclature of the column headings in tables 1-8 is self-explanatory with the exception of the column headed "Before Traffic" under the large heading "During Traffic Data." This column shows an interpolated value for the cone index at the indicated depth of rut based on before traffic data.

Soil testing instruments

50. Selection of bearing value instrument. Previous laboratory work had developed both the cone penetrometer and the drop cone to the point where both had outstanding merits. The cone penetrometer had the advantage of permitting rapid readings with depth, particularly in the softer soils. The drop cone had the apparent advantage of eliminating

some of the human element inherent in determining just when movement of the cone starts when using the penetrometer. In the initial phases of the tests at the Rifle Range site, parallel readings were made with both instruments. In addition to the comparable values obtained in this manner, observations of the ease of use of each instrument were noted.

51. Plate 10 is a photograph of the drop cone and plate 11 shows construction details. The drop cone consists of a 30° cone attached to a plunger. The plunger and cone weigh 1.25 lb. It operates in a cylinder fitted with a catch that engages a groove in the plunger when the tip of the cone is 4 in. above the end of the cylinder. In operation the cylinder is placed on the surface to be tested and the catch is released allowing the plunger to fall and the cone to penetrate the soil. Penetration is determined by a scale on the side of the plunger. Except where water was present, the operation of the drop cone in taking readings on the surface of the test lanes was very simple. Readings could be made rapidly and with fair consistency in penetration tests. The penetration of the drop cone was converted to cone index using the curve of penetration versus cone index shown on plate 14 which was developed in previous laboratory correlations. This curve is relatively steep and small variations in penetration cause relatively large variations in cone index values. For this reason the actual cone index values obtained with the drop cone were not as consistent as the readings obtained directly with the cone penetrometer even though the penetration values showed only minor variations. Where water was present it was necessary to set a short section of casing and bail the water before the test was made. The operation of taking readings with the drop cone below the

surface of the ground involved difficulties in boring or excavating a hole with a sufficiently smooth bottom. Because the instrument is calibrated on a smooth surface, any concavity or convexity of the surface being tested is automatically added to or subtracted from the true readings. No feasible means of correcting for this factor was devised. It is considered that the requirement of a casing for taking readings in inundated areas and the difficulties encountered in taking tests below the surface are serious drawbacks to the drop cone.

52. The operation of the cone penetrometer was very simple under practically all circumstances. No difficulty was experienced in obtaining readings in the test lanes in either dry or inundated areas, and readings could be taken at intervals of depth without removing the cone penetrometer. Reasonably consistent results could be obtained by different operators. The difficulty experienced in determining just when the cone starts moving which was inherent in the spring-type instrument was largely eliminated by substituting the proving ring as a load-measuring device for the spring used in the 1945 instrument. The movement in the spring-type instrument was approximately 3 in. and was so great that it was impossible to determine movement without direct contact with the cone. In the new model the movement in the load-registering device is negligible. Movement of the cone can be determined by "feel" without direct contact with the cone. Learning the "feel" does not require an extensive training period. The "feel" is difficult to describe but on several occasions visiting engineers were asked to try the instrument. After one or two trials they were able to determine with ease when movement of the cone started.

53. Development of sampler. The Rifle Range soil proved to be rather elastic in the range of moisture contents above the plastic limit making it difficult to obtain samples sufficiently undisturbed to use for density samples. The Mound soil was not so elastic as the Rifle Range soil, but it also offered some difficulties in density sampling. Samples near the surface were obtained in both soils without difficulty by forcing a 2.8-in. diameter by 3-in. section of thin wall tubing into the soil. The sample tube was then excavated with the soil inclosed. Samples at depths below the surface were much more difficult to obtain. Reasonably satisfactory samples were obtained by forcing a long, thin wall tube into the soil and by breaking the samples at the bottom of the tube with a probe forced down alongside the sample tube. In the latter stages of the traffic tests, Dr. M. Juul Hvorslev, a recognized authority on sampling methods, suggested a thin-walled sampling cylinder with a piston. Details of this piston sampler are shown on plate 15. The piston aids in preventing the sample from being driven ahead of the cylinder by creating a slight vacuum as the tube is forced down. It is also used to expel the soil. An arrangement is provided whereby a known length of sample can be expelled and cut off. The sample thus obtained is used in the density determination. One of these samplers was constructed and used in the last phase of the tests. It showed some promise; however, further testing is needed.

PART III: DISCUSSION

54. Results of the pilot studies are presented on two phases of the investigation. The first phase deals with methods and technique of testing evolved in the pilot tests; the second deals with the correlation of these data with data obtained for the general problem on trafficability.

Methods and Techniques

Processing soil

55. Observations made in this study indicate that the first step in processing soil for these tests is drying and pulverizing the soil in work areas outside the test lanes. Lanes can then be constructed with dry soil without obtaining densities higher than found in natural soils. Where a soft, wet lane is desired the best procedure is to construct the lane to full height in one lift, flood it for two or three days, then drain the water and allow the lane to dry back to the desired condition. Where a relatively dry lane is desired water can be added during construction. In this type of processing thin lifts must be used. These procedures are applicable to highly plastic soils as well as soils of low to medium plasticity; however, drying and pulverizing a highly plastic soil is more difficult than processing a soil of low to medium plasticity.

56. For determination of bearing capacity and traction capacity requirements, test lanes should be processed to a depth of 24 in. For determination of stickiness requirements, a depth of processing of about 4 in. is desirable.

Traffic testing

57. In tests to determine bearing and traction capacity requirements, the direction of travel has little apparent effect. Operating the equipment back and forth without turning is faster than turning and should be used where satisfactory reverse gear ratios are available. In tests to determine if vehicles can be immobilized by stickiness, the equipment should travel in the same direction at all times as reversing the direction tends to clean the vehicle.

58. In general, 40 trips are sufficient to determine if the action of traffic is beneficial or detrimental to soil conditions, although in some cases, especially stickiness tests, this can be determined in a lesser number of trips. Where traffic is producing detrimental effects, it should be continued until immobilization occurs or until the detrimental effects cease.

Drawbar

59. An electrically-recorded reading of the drawbar pull is much more satisfactory than a visually-read value. With the recording it is possible to eliminate surges and determine reasonable average values. Determining the maximum drawbar pull that the vehicle can develop from a standing position gives the most reasonable value for use in predicting the towing capacity of the vehicle under combat conditions.

60. Applying tow loads with two tractors operating off the test lanes is a satisfactory method of applying a tow load. A wide range of loads can be applied which remain reasonably constant throughout the traffic test regardless of the condition of the test lane.

Observations

61. Complete records of the vehicle and its equipment, the soil conditions, the behavior of the equipment, and the condition of the lanes during traffic are necessary in analyzing the data to determine the cause of immobilization. The observations should include notations regarding the progress of the vehicle, the extent of soil collecting on the wheels or in the tracks, the movement of soil under the wheels or treads, and the difficulty the vehicle encounters in traversing the area. Observations of nonuniform conditions in the test lanes should be noted. Where a vehicle is immobilized, the apparent reason should be recorded in the form of standard statements for comparative purposes.

62. Cross sections and profiles before and during traffic are needed to determine depth of ruts. Accurate readings are needed; however, elaborate methods and actual elevations are not necessary and the use of an arbitrary datum plane and a special level rod as described in paragraph 46 reduces the amount of labor required in plotting the cross sections. Generally a cross section at fifth points in a 100-ft test lane and profiles along the two tracks are sufficient; however, intermediate cross sections should be taken where nonuniform conditions exist.

Soil tests

63. A study of the data from the pilot studies indicates that more than adequate soil data were obtained. Since moisture and density sampling require considerable time, it is believed that the number of moisture and density samples could be reduced. It is recommended that moisture and density samples be taken at 6-in. intervals of depth every 8 ft

along both tracks rather than by the method used in the pilot studies. Where nonuniform conditions exist sufficient readings should be taken to determine the extent of the nonuniformity.

Soil testing instruments

64. Selection of instrument. The observations on the use of the cone penetrometer and the drop cone show that the penetrometer is the easier instrument to use especially where readings are taken at successive depths. The substitution of a proving ring for reading the load has eliminated a large percentage of the personal errors inherent in the older spring-loaded model. Also, cone index values taken with the cone penetrometer appeared to be more consistent than cone index values obtained with the drop cone. Since the cone penetrometer is easier and faster to use and since more consistent readings can be obtained with it than with the drop cone, the cone penetrometer has been selected for use in future tests. More complete details are given in the report, "Development of Trafficability Instruments."

65. Sampler. The samplers used in the early part of the pilot studies were not entirely satisfactory. The piston sampler suggested by Dr. Hvorslev was not used enough to adequately determine its feasibility. Additional testing is needed on this sampler.

General Trafficability

Correlation of cone index

66. A summary of the analyses presented in tables 1-8 is given below for each vehicle. The results are discussed and compared with

correlations made in previous tests. The analyses given in the last column of tables 1-8 are based primarily on the cone index values during traffic measured at the surface of the rut and at 3 in. below the surface of the rut with slightly more weight generally given to the value at the 3-in. depth. In the case of the LVT-4, practically all weight was given the cone index at the 3-in. depth because of the long grousers on the tracks. Where immobilization occurred on the first pass, the analysis is based on the before traffic data. Except for the tests with the Weasel the cone index values in the analyses have been rounded off to figures divisible by 5 as the accuracy inferred by finer divisions is not warranted. In the tests with the Weasel the cone indexes were relatively low and rounding off the values was not feasible. In evaluating these tests it is considered that the cone index values in the ruts are indicative of the strength of the soil on which the vehicle is operating. It is recognized, however, that in predicting the trafficability of a given soil the prediction must be based on before traffic data. Where traffic was limited the before traffic data and the values in the ruts are in good agreement. Where traffic was maintained for a large number of passes, an increase in cone index usually occurred in the rut although there are a few cases where there was a decrease. The problem of the changes that occur under traffic is not treated in this report but it is recognized.

67. D-7 Tractor.

Cone Index	Site	Test No.	Analysis
130 - 170	Rifle Range	1	Operated and towed light(1) load for 1000 passes(2)

Cone Index	Site	Test No.	Analysis
70 - 120	Rifle Range	2	Operated and towed light load for 400 passes(2)
70 - 100	Rifle Range	3	Operated and towed 2500- to 4600-lb load for 60 passes
Above 70	Rifle Range	6	Operated and towed light load for 1000 passes(2)
55 - 85	Mound	9	Operated and towed 10,000-lb load for 500 passes
30 - 55	Rifle Range	4 & 5	Operated and towed light load for 150 and 1000 passes(2)
25 - 30	Mound	8	Immobilized after 4 passes towing light load
20 - 30	Mound	12	Immobilized after 6 passes towing light load
20 - 25	Mound	11	Immobilized after 3 passes towing 8,000-lb load
15 - 20	Rifle Range	15	Could not make 1 pass towing light load
5 - 20	Rifle Range	7	Could not make 1 pass without tow load

(1) Light load is between about 800 and 2000 lb.

(2) Could have continued indefinitely and could probably have towed a heavier load.

These correlations indicate that at cone indexes below 30 the tractor can operate only a very limited number of passes. As the cone index increases the tractor can operate a greater number of trips and pull a more substantial load. At a cone index of about 55 the tractor can pull a reasonable load for a substantial number of passes. Previous correlations indicate that a cone index in the range of 30 to 55 is required for operation of the D-7 tractor.

68. 2-1/2-ton truck.

Cone Index	Site	Test No.	Chains	Analysis
95	Mound	24	Yes	Made 40 passes, finally immobilized in 17-in. rut
70 - 80	Rifle Range	14	No	Made 75 passes(1)
50 - 90	Mound	1	No	Made 40 passes (1)
65 - 75	Rifle Range	10	No	Made 69 passes(1)
65	Rifle Range	11	No	Made no passes but immobilization was due to slipperiness
55 - 70	Mound	25	Yes	Made 1 pass
35 - 45	Rifle Range	29	Yes	Could not make 1 pass
35 - 40	Rifle Range	9	Yes	Made 37 passes(1)
30 - 40	Rifle Range	30	No	Could not make 1 pass
30	Rifle Range	19	No	Made 1 pass
30	Mound	2	No	Could not make 1 pass
25 at 6 in.	Rifle Range	23	No	Could not make 1 pass
100 at 12 in.				
Less than 20	Mound	22	Yes	Could not make 1 pass

(1) Could have continued

There is no clear demarcation of the cone index required for the 2-1/2-ton truck. However, for cone index values in excess of about 70, no trouble was experienced except where the rut was excessively deep.

Previous correlations indicate a minimum value in the range of 50 to 80 is required. The depth at which the required cone index is found is important. In test 9, the truck operated 37 passes on soil with a cone index in the rut of 35-45; however, this soil was relatively firm from the surface down at the start of the test. The truck cut only a 12-in. rut in 37 passes. By comparison, in test 25 the truck could operate only one pass on soil with a cone index of 55-70. In this test the firm layer was at a depth of 12 in. and the truck cut a 12-in. rut the first pass. The effect of depth to the required cone index is a factor that requires further study.

69. Weasel M29C.

Cone Index	Site	Test No.	Analysis
20 - 30	Rifle Range	8	Immobilized after 69 passes in 1 rut, continued to 432 by spreading traffic. Traffic reduced cone index, and vehicle was immobilized at cone index of 7 to 9.
20 - 25	Mound	10	Operated for 200 passes(1)
10 - 15	Rifle Range	16A	Immobilized after 27 passes by soil jamming in mud guards and fenders
15 - 17	Rifle Range	16B	Operated for 100 passes without mud guards or fenders(1)
3 - 9	Mound	21	Immobilized after 4 passes
8	Rifle Range	17	Operated for 100 passes(1)
3 - 6	Rifle Range	13	Immobilized after 8 passes
2 - 5	Rifle Range	12	Could not make 1 pass
2 - 4	Rifle Range	18	Immobilized after 3 passes

(1) Could have continued

These are the first data obtained with the Weasel. As can be seen, it is very difficult to immobilize the Weasel because of lack of bearing capacity or traction capacity. The Weasel consistently operated over soil that was too soft to support a man. Immobilization in tests 8 and 16A at the Rifle Range was attributed to mud packing in the track mechanism. It is considered that a cone index of 10 is adequate for the Weasel. Since these are the first tests, no previous correlations are available; however, it was estimated in the report "Trafficability of Soils" that the Weasel would operate on soil with a cone index of 15. These data indicate that the estimate is conservative.

70. LVT-4.

Cone Index	Site	Test No.	Analysis
50 - 70	Mound	4	Operated for more than 500 passes
45	Rifle Range	24	Operated for more than 20 passes
40	Rifle Range	31	Operated for more than 100 passes
30	Rifle Range	20	Immobilized after 5 passes
20 - 25	Mound	3	Immobilized after 3 passes
Less than 20 in top 12 in.	Mound	23 & 29	Could not make 1 pass

These are also the first correlations obtained for the LVT-4. It appears that a cone index of about 40 is required for this vehicle. In the report referred to above it was estimated that a cone index of 35 would be required. These data indicate that this estimate is somewhat radical.

Correlation of stickiness

71. An inspection of the summary of test results, tables 1-8, shows that the Weasel was the only vehicle immobilized by stickiness. In practically every test conducted with this vehicle at both the Rifle Range and Mound sites the observations note that difficulty was experienced by soil jamming the track mechanism. In some cases complete immobilization occurred from this factor. Since this occurred in the Rifle Range soil which is not a highly sticky soil, the immobilization of the Weasel in these tests is not considered true stickiness but a characteristic of the vehicle.

72. Except for the tests with the Weasel, no difficulty from stickiness was noted at the Rifle Range site. In about 12 of the 18 tests at the Mound site, the observations contained notations that soil was adhering to the vehicles and in a few cases stickiness was listed as a factor in causing immobilization. However, in the tests conducted on the turnaround and in the borrow areas where the thin layer of sticky soil permitted isolating the stickiness factor, none of the vehicles was immobilized by stickiness.

73. A study of the results obtained by the spatula test indicates that in every case where stickiness was noted in the observations (except in the Weasel tests) the spatula reading was "complete" and where the spatula reading was "some" or "none" there was no record of stickiness in the observations. There were, however, cases where the spatula reading was "complete" and no stickiness developed in the test. This occurred consistently in the wetter soils at both the Rifle Range and Mound sites. The soil would adhere to the vehicles but would not build up and cause

trouble because it would be slung off by movement of the wheels or tracks. These observations indicate that the spatula test shows two conditions, one in which the moisture content is below the sticky point and the soil will not adhere to the vehicle, and the other in which the moisture content of the soil is in the range where the soil will adhere to the vehicles. In the first case it can be definitely stated that no trouble will be experienced from stickiness. In the second case the only statement that can be made is that stickiness may occur.

74. Another drawback to the spatula test is that no provisions are available for determining the degree of stickiness. This has been a problem since the initial studies and the only method developed to date for determining degree of stickiness is the use of the plasticity index. It is known from previous work in other fields that the higher the plasticity index, the stickier the soil. This is borne out in the pilot tests. The Rifle Range soil, with a plasticity index of 14, gave no trouble from stickiness except for the Weasel; whereas, the Mound soil with a plasticity index of 38 proved to be sticky under certain conditions. The degree of stickiness is not shown by the spatula test although the skillful technician can identify highly plastic, sticky soils as he conducts the spatula test.

75. Correlations of stickiness with moisture content can be made for the Mound soil since stickiness was noted in these tests. Data are summarized below:

Test No.	Moisture Content Per Cent	Traffic Observation
27	20	None noted

Test No.	Moisture Content Per Cent	Traffic Observation
26	25	None noted
28	27	None noted
1	34	None noted
4	34-35	None noted
7, 20	36	None noted
9	30-37	None noted
13	37	Stickiness noted
6	38	Stickiness noted
8	38-42	Stickiness noted
25	40	Stickiness noted
11	40-41	Stickiness noted
12	41-42	Stickiness noted
18, 24	42	Stickiness noted
19	43	Stickiness noted
2	46	None noted (no passes completed)
3, 14, 29	46	Stickiness noted
22, 23	50	Stickiness noted

These observations showed that stickiness developed at moisture contents of 37 per cent and above. This soil has a plastic limit of 24 per cent and a liquid limit of 62 per cent which gives a plastic range of 38. A moisture content of 37 per cent is 13 above the plastic limit or 34 per cent in the plastic range. Previous correlations set a value of 50 per cent in the plastic range as the point where stickiness began to develop. These data indicate that 50 per cent may be too high.

Slipperiness

76. While these tests were not conducted to obtain information on slipperiness, test 11 with the 2-1/2-ton truck at the Rifle Range site is an excellent example of the way slipperiness immobilizes a vehicle. Although the cone index of the underlying soil was 65, accidental spillage of free water made the surface so slippery that the rubber tires without chains could not develop the necessary traction. A good chain or an aggressive grouser on a track would have cut through the slippery surface into the underlying hard soil.

Correlation of slope

77. Tests were made on 5 and 6 per cent slopes with the truck, LVT-4 and tractor. In each case the maximum drawbar pulls were obtained on both the slope and level ground. The table below shows the values that were actually obtained on the slope compared with the value computed on the basis of the drawbar pull developed on level ground. Computations were made using the principles presented in Appendix C of the report "Trafficability of Soils".

Test	Vehicle	Site	Slope Per Cent	Pull in Lb Actual	Pull in Lb Computed
26	2-1/2-ton truck	Mound	5	9,200	9,710
27-28	2-1/2-ton truck	Rifle Range	6	13,000	11,680
28	LVT-4	Mound	5	20,000	21,280
25-26	LVT-4	Rifle Range	6	21,300	20,530
27	D-7 tractor	Mound	5	19,500	19,470

78. In all cases except the 2-1/2-ton truck at the Rifle Range

site, the correlations between the pull actually developed and that computed from the drawbar developed on level ground are close.

Classifications of vehicles

79. Presented below is a comparison of the minimum cone index which provided adequate support in these tests with the minimum according to the classification given in the Appendix D of the report "Trafficability of Soils" dated 1 September 1945.

Vehicle	Minimum in these tests	Minimum according to "Trafficability of Soils"
Weasel M29C	8	15
D-7 Tractor	30	35
2-1/2-ton Truck	60 with or without chains	50 with chains 80 without chains
LVT-4	40	35

80. In general, the original classifications on these vehicles agree fairly well with the results obtained in this series of tests. In two cases the classification is conservative and in two cases it is not. The indications are that minor revisions in the limits of each group and in the vehicles in each group may be necessary when additional data are obtained.

81. Although the Weasel is able to operate on very soft material it is so susceptible to immobilization from soil jamming the track mechanism that this feature must be included in the classification. Two courses of action are possible. The safest course would be to reclassify the Weasel from group A, the group in which it was classified in Appendix D of the "Trafficability of Soils" report, and place it in C or D group.

The other course would be to leave the vehicle in A group but note that continuous operation in muddy soil will produce immobilization. Determination of the most desirable action must await accumulation of more data. Consideration should be given to redesigning the suspension and track mechanism to give a vehicle less susceptible to this trouble.

General results

82. Results of these pilot tests are very promising. The primary reason for recommending pilot tests was lack of confidence in instruments and procedures. In these studies the instruments, especially the cone penetrometer, performed well. The values obtained are reasonable and different operators obtained consistent results. In the traffic tests there were very few unexplainable results as in previous tests. Where immobilization occurred the test results indicated critical conditions and where immobilization did not occur the test data indicated that conditions were better with minor exceptions. Prior to these tests all the data, except for limited amounts, was for the Rifle Range soil, which is a soil of low to medium plasticity. It is very encouraging to find that bearing capacity and traction capacity requirements applicable to this soil are also applicable to the Mound soil which is highly plastic. This had been assumed to be true but had not been proven.

83. While it is still too early to make specific predictions, the results of these studies indicate that the empirical approach of correlating the index of the shearing resistance of the soil as determined by readings of the cone penetrometer with the ability of vehicles to negotiate the soil will be satisfactory.

PART IV: CONCLUSIONS

84. On the basis of the results obtained in these tests, the following conclusions are made.

Methods and Techniques

a. The studies developed satisfactory methods for constructing test lanes for applying traffic and obtaining test data.

b. The cone penetrometer as used in these tests is satisfactory for determining bearing and traction capacity of soils.

c. The cone index values determined with the cone penetrometer can be used to predict passage of vehicles over different types of soils.

d. The spatula test will indicate when the soil is so dry that it will not adhere to the vehicles and when it is sufficiently wet to adhere. In the first case immobilization from stickiness will not occur; in the second case it may occur.

e. The plasticity index of a soil is an indicator of the degree to which stickiness will be a trafficability factor. Soils with medium to low plasticity indexes cause no trouble; the difficulty increases with increasing plasticity index.

f. The electrically recording dynamometer used in these tests was satisfactory.

g. A satisfactory sampler for taking undisturbed samples was not developed.

General Trafficability

a. Classifications of the D-7 tractor, the 2-1/2-ton truck, the LVT-4, and the Weasel as shown in the report "Trafficability of Soils" are reasonably satisfactory although minor revisions in the minimum cone index values are indicated.

b. Stickiness as an isolated factor did not immobilize any vehicle in these tests.

c. The Weasel is very susceptible to immobilization by soil jamming in the track mechanism.

d. The empirical approach of correlating trafficability of soils with the cone index of the soil as determined by the cone penetrometer appears satisfactory.

PART V: RECOMMENDATIONS

85. It is recommended that:

a. Full-scale field studies be conducted using the methods, procedures, and instruments outlined in Part III to obtain data for classifying vehicles and determining the trafficability of soils.

b. The cone penetrometer used in these studies be considered satisfactory except for revisions in design to suit it for troop use.

c. Development work continue on a stickiness indicator and a sampler.

d. Development work in c above include a determination of the actual need for these instruments.

e. The track mechanism of the Weasel be redesigned to reduce the tendency for soil to jam the mechanism producing immobilization.

TABLE 1

SUMMARY OF TRAFFIC TESTS
D-7 TRACTOR - RIFLE RANGE SITE

Vehicle: Gross Weight 30,090 Pounds
Nominal Contact Pressure 7.6 PSI

Soil: Clayey Silt, C.E. Class. ML, PRA Class. A-4
Liquid Limit 39, Plasticity Index 14

Operation				Remarks	Soil	Before Traffic Data							During Traffic Data											
							Depth in Inches								Cone Index									
Test No.	Lane	Passes Completed	Reason for Discontinuing Traffic		Depth Process Inches	Test[1]	0	6	12	18	24	Passes	Depth Rut Inches	Before Traffic	In Ruts	3 In. Below Ruts	Moisture in Ruts	Density 0-6 In.	Stickiness	Drawbar Pull in Pounds	Tow Load in Pounds	Analysis
1	1	1000	Evident test could have continued indefinitely	Tractor towing two Athey wagons each loaded 19,000 lbs. gross; wagons towed thru lane.	12	CI	53	111	115											26,200		Tractor could operate indefinitely and pull a small continuous load. Cone index of material on which tractor was operating for most of time was 130 to 170.
						WC	23	24				2	5	55	128	129	23	98	None			
						D	96	93				60	2	80	165	152	22	103	None	25,000	1400	
						S	None					160	2	80	168	160	22	102	None	30,000	1400	
												400	3	87	170	148	20	103	None		1700	
												719	4	93	168	146	20	104	None		2100	
												1000	4	93	158	156	19	107	None		2100	
2	2	400	Evident test could have continued indefinitely	Tractor towing two Athey wagons each loaded 19,000 lbs. gross; wagons towed thru lane.	12	CI	66	71	92			4	1	67	120	90	25	95	None	32,200	1600	Tractor could operate indefinitely and pull a small continuous load. Cone index of material on which tractor was operating was 70 to 120.
						WC	27	27	26			30	2	67	122	85	25	95	None	22,000	1600	
						D	93	93	93			120	3	68	126	70	23	99	None		1600	
						S	None					230	4	69	134	82	23	101	None		1800	
												400	5	70	150	125	22	102	None		1800	
6	2	1006	Evident test could have continued indefinitely	Tractor in third gear towing tractor, gross weight 31,000 pounds	18	CI	53	96	66	38	58	1	-	-	-	-	-	-	-	22,500	1200	Tractor operated and pulled a small continuous load for 200 trips on material with a cone index of more than 70.
						WC	25	25	24	26	28	30	7	93	32	70	27	95	None	19,500	1000[2]	
						D	93	93	95	95	91	70	9	85	-	-	24	96	None	30,000	1000[2]	
						S	None					200	11	72	92	108	24	97	None	26,000	2000	
												500	13	60	138	146	21	103	None	32,000	1700	
												1006	15	49	164	-	18	105	None	25,000		
3	1	600	Evident test could have continued indefinitely	Tractor in third gear towing tractor, gross weight 31,000 pounds	24	CI	67	69	66	70	84	4	3	69	71	79	-	-	None	-	4600	Tractor operated and pulled a substantial continuous load for 60 trips on material with a cone index in the range of 70 to 100.
						WC	24	24	24	26	26	30	5	69	100	72	22	100	None	24,000	3500	
						D	97	97	96	95	97	60	6	69	99	83	22	99	None	26,100	2500	
						S	None					600	11	67	170	148	19	105	None	21,500	1900	
5	5	1000	Evident test could have continued indefinitely	Tractor in third gear towing tractor, gross weight 31,000 pounds	12	CI	8	30	48			5	7	33	21	-	29	92	Some	13,000	1000[2]	Tractor operated and pulled a light continuous load for 150 trips on material with a cone index ranging from 30 to 55.
						WC	31	31	28			150	10	43	28	54	28	92	Some	26,000	1000[2]	
						D	88	88	92			300	11	47	39	72	28	93	Some	4,400	2500	
						S	Some					600	12	48	55	100	26	93	Some	29,000	1200	
												1000	11	47	82	98	25	97	None	26,000	2000	
4	4	1000	Evident test could have continued indefinitely	Tractor in third gear towing tractor, gross weight 31,000 pounds	12	CI	12	20	36			4	6	20	27	28	31	85	Complete	15,900	800-2100	Tractor operated and pulled a light continuous load for 1000 trips on material with a cone index ranging from 30 to 55.
						WC	33	32	31			30	10	29	40	34	30	89	Complete	15,700	2500	
						D	84	84	85			130	11	33	40	42	29	91	Some			
						S	Complete					1000	12	36	53	56	26	93	Some	24,400	1000[2]	
7	6	0	Tractor struck on first pass due to sinkage	Tractor sank to axles	24	CI	5	8	14	23	34	0	-	-	-	-	-	-	-	None taken	None	Material with cone index of 5 on surface increasing to 20 at depth of 18" not adequate for tractor without tow load.
						WC	37	37	36	34	36											
						D	79	79	77	82	79											
						S	Complete															
15	7	0	Tractor struck on first pass due to sinkage	Tractor sank to axles	24	CI	15	16	18	21	27	0	-	-	-	-	-	-	-	12,000	2000	Material with cone index of 15 to 20 not adequate for tractor with small tow load.
						WC	34															
						D	82															
						S	Complete															

NOTES: (1) CI - Cone index (no units) WC - Water content (% dry wt) D - Density (lbs/cu ft) S - Stickiness (no units).
(2) Reading less than 1000.

TABLE 2

SUMMARY OF TRAFFIC TESTS
D-7 TRACTOR - MOUND SITE

Vehicle: Gross Weight 30,090 Pounds
Nominal Contact Pressure 7.6 PSI

Soil: Buckshot Clay, C.E.Class. CH, PRA Class.A-6
Liquid Limit 62, Plasticity Index 38

Operation				Remarks	Before Traffic Data							During Traffic Data										
							Depth in Inches							Cone Index								
Test No.	Lane	Passes Completed	Reason for Discontinuing Traffic		Depth Process Inches	Test[1]	0	6	12	18	24	Passes	Depth Rut Inches	Before Traffic	In Ruts	3 In. Below Ruts	Moisture in Ruts	Density 0-6 In.	Stickiness	Drawbar Pull in Pounds	Tow Load in Pounds	Analysis
9	2	500	Evident test could have continued indefinitely.	D-7 in lane in 2nd gear towing D-7 on natural surface.	24	CI	45	33	44	78	114	1	2	40					Some		1,000	Tractor could tow a continuous heavy load for more than 500 trips on material with a cone index of 55 to 85.
						WC	37	32	30	34	36	2	3	37					Some			
						D	80	78	79	81	82	4	4	35					Some	22,600	10,400	
						S	Some					100	7	34	54	60	35	84	Some		10,400	
												300	9	36	60	64	32	86	Some		10,400	
												500	13	50	75	84	33	86	Some		10,400	
11	5	3	Accumulation of mud in crawler rollers due to stickiness and deep rutting. Belly pan dragged due to mud rolling up in middle.	D-7 in lane in 2nd gear.	24	CI	24	25	33	33	101	3	10	27	22	25	41	76	Complete	13,500	8,000	Tractor could make only 3 passes with a tow load of 8000 pounds on material with a cone index of 20 to 25.
						WC	41	40	41													
						D	76	76	76													
						S	Complete															
12	5	6	Tractor immobilized due to stickiness and deep rutting. Mud built up under belly guard, drawbar, and around inside of track rollers.	D-7 in lane in 2nd gear stuck on 5th trip. D-7 in lane in 1st gear stuck on 7th trip.	24	CI	23	25	28	32	63	6	14	29	22	29	41	77	Complete	No Reading taken.	1,000[2]	Tractor could make only 6 passes with a light load on material with a cone index of 20 to 30.
						WC	41	42														
						D	76	75														
						S	Complete															
8	3	4	Tractor immobilized due to stickiness, to mud piling up in front of tractor in long rolls, and to bogging down due to soft subgrade.	D-7 in lane in 2nd gear towing load. D-7 in lane in low gear. No tow.	24	CI	18	25	28	30	30	1	6	25						1,000	1,000[2]	Tractor can make only 4 passes on material with a cone index of 25 to 30 without a tow load.
						WC	42	38	41	41												
						D	76	76	76	76		4	14	29	27	29	40	78	Complete	1,000	No load towed	
						S	Complete															
20	Turn-a-round	40	Evident test could have continued indefinitely.	Test conducted to determine stickiness	Sfc	CI	60	-	-	-	-	-	-	-	-	-	36	-	None	No Reading taken.	No load towed	No evidence of stickiness.
27	11	-	Drawbar pulls only.	Pulls on level surface	5	CI	25	44	-	-	-	-	-	-	-	-	20	83	None	21,000		Drawbar pull on slope was slightly less than on level.
-	-	-	Drawbar pulls only.	Pulls on 5% slope	6	CI	17	41	-	-	-	-	-	-	-	-	20	84	None	19,500		

NOTES: (1) CI - Cone index (no units) WC - Water content (% dry wt) D - Density (lbs/cu ft) S - Stickiness (no units) Sfc - Surface.
(2) Reading less than 1000.

TABLE 3

SUMMARY OF TRAFFIC TESTS
2-1/2-TON TRUCK - RIFLE RANGE SITE

Vehicle: Gross Weight 21,600 Pounds
Equipped with 10.50 x 18 Tires

Soil: Clayey Silt, C.E. Class. ML, PRA Class. A-4
Liquid Limit 39, Plasticity Index 14

Equipment				Operation		Soil	Before Traffic Data							During Traffic Data									
								Depth in Inches								Cone Index							
Test No.	Lane	Tires Inflation in PSI	Traction Device	Passes Completed	Reason for Discontinuing Traffic	Depth Process Inches	Test[1]	0	6	12	18	24	Passes	Depth Rut Inches	Before Traffic	In Ruts	3 In. Below Ruts	Moisture in Ruts	Density 0-6 In.	Drawbar Pull in Pounds	Analysis
9	2	12	Chain, single front, tandem rear.	37	Truck sank down to axles but could continue to operate.	24	CI WC D S	37 26 90 Some	60	74	86	112	37	12	74	36	41	26	89	12,200	Soil with cone index of 35 to 40 was adequate for 37 passes. Chains reduced bearing value in the ruts considerably.
10	2	12	None	69	Truck bogged down deep but could continue to operate.	24	CI WC D S	36 26 92 Some	46 26 88	63 26 96	91 25 97	135 28 94	69	15	80	66	74	26	95	11,500	Soil with cone index of 65 to 75 was adequate for 69 passes. Tires did not cause as serious loss in strength in the ruts as the chains.
11	2	12	None	0	Slipperiness caused by accidental addition of water.	24	CI WC D S	66 30 95 Complete (on surface)	82 26 96	26			1	15	66	66	74	30	95	-	Free water causes soil with cone index of about 65 to be too slippery for rubber tires.
14	2	12	None	75	Multi-pattern tracking; however, vehicle slipped into ruts. Not immobilized.	24	CI WC D S	15 26 92 Some	35	65	85	105	75	14	72	70	78	26	95	-	Soil with cone index of 70 to 80 was adequate for 75 passes.
23	2	12	None	0	Vehicle immobilized due to accumulation of mud in front of axles.	12	CI WC D S	5 34 80 Complete	25	108	-	-	1	12	-	-	-	-	-	-	Soil with cone index of 25 at 6 inches and in excess of 100 at 12 inches is not adequate.
27	9	12	None	1	Drawbar test on 6% slope.	12	CI WC D S	46 26 93 Some	83	110	-	-	1	2	60	52	80	25	95	13,000	Drawbar pull on level ground and on slope was the same.
28	9	12		1	Drawbar test on level surface.	12	CI WC	38	75	112			1	2	50	60	95	23	97	13,000	
19	7	12	None	1	Immobilized on 2nd trip due to deep rutting.	24	CI WC D S	61 34 84 Complete	30 34 84	27 34 84	35 36 80	42 36 81	1	14	-	-	-	-	-	12,500	Soil with cone index of about 30 is not adequate. Surface layer of material with cone index of 60 did not help appreciably.
29	3	12	Chains, single front, tandem rear.	0	Immobilized due to mud piling up in front of axles.	12	CI WC D S	43 28 92 Some	36	24	35	-	1	9	28	46	36	28	92	8,900	Soil with cone index of about 35 to 45 is not adequate.
30	3	12	None	0	Immobilized due to mud piling up in front of axles.	12	CI WC D S	43 28 92 Some	36	24	35	-	1	10	26	28	38	29	91	7,100	Soil with cone index of about 30 to 40 is not adequate.
21 (2)	Turn-a-round	12	None	-	Truck can operate in low gear with ease. No slipping.	Sfc	CI WC - S	57 27 - Complete	-	-	-	-	-	-	-	-	-	-	-	-	Soil with moisture content of 27 caused no trouble from stickiness.
22 (2)	Turn-a-round	12	None	-	Truck operated with ease.	Sfc	CI WC - S	36 36 - Complete	-	-	-	-	-	-	-	-	-	-	-	-	Soil with moisture content of 36 caused no trouble from stickiness.

NOTES: (1) CI - Cone index (no units) WC - Water content (% dry wt) D - Density (lbs/cu ft) S - Stickiness (no units).
(2) Tests conducted to determine stickiness of soil.

TABLE 4

Vehicle: Gross Weight 21,600 Pounds
Equipped with 10.50 x 18 Tires

SUMMARY OF TRAFFIC TESTS
2-1/2-TON TRUCK - MOUND SITE

Soil: Buckshot Clay, C.E. Class. CH, PRA Class. A-6
Liquid Limit 62, Plasticity Index 38

		Equipment		Operation		Soil	Before Traffic Data						During Traffic Data								
								Depth in Inches							Cone Index						
Test No.	Lane	Tires Inflation in PSI	Traction Device	Passes Completed	Reason for Discontinuing Traffic	Depth Process Inches	Test[1]	0	6	12	18	24	Passes	Depth in Inches	Before Traffic	In Ruts	3 In. Below Ruts	Moisture in Ruts	Density 0-6 In.	Drawbar Pull in Pounds	Analysis
1	1	16	None	40	Apparent vehicle could have continued indefinitely.	24	CI WC D S	18 34 80 Complete	99	53	46	76	20 40	8 12	80 53	52 60	65 90	32	85	-	Soil with cone index of 50 to 90 was adequate for 40 passes. A 6-inch thickness of material with cone index of about 20 did not cause trouble.
2	4	16	None	0	Vehicle immobilized on first pass due to sinkage.	12	CI WC D S	10 46 72 Complete	21 46 72	29 44 74	53 42 75	130	1	15	-	-	-	-	-	1,000[2]	A 12-inch thickness of soil with cone index less than 30 caused immobilization even though material with a high cone index was present at 18 inches.
22	6	16	Chains, single front, tandem rear.	0	Vehicle immobilized due to sinkage and stickiness. Axles pushing wall of mud.	12	CI WC D S	6 50 - Complete	15	20	120	-	1	15	66	85	120	34	84	-	A 12-inch layer of soil with cone index of less than 20 caused immobilization even though material with a high cone index was present at 15 inches.
24	7	16	Chains, single front, tandem rear.	40	Vehicle immobilized due to sinkage and stickiness. Axles mired deep into mud and pushed wall of mud.	8	CI WC D S	13 42 75 Complete	27 42	100 41	-	-	40	17	100	95	-	30	83	7,000	Soil with index of 95 was satisfactory for 40 passes.
25	7	16	None first trip. After vehicle stuck chains were installed.	1	Vehicle stuck on second trip due to deep rutting and stickiness.	8	CI WC D S	21 40 76 Complete	28 40 76	100	-	-	2	12	100	56	73	35	84	6,500	Soil with cone index of about 55 to 70 was adequate for only 2 passes.
26	11	16	Chains, single front, tandem rear.	1	Drawbar pulls only. Pulls made on level ground and on 5% slope.	6	CI WC D S	30 25 81 None	100	-	-	-	1 1	-	-	-	-	-	Level ground 5% slope	10,800 9,200	Pull developed on level ground was higher than pull developed on slope.
6	Dike Area (3)	16	None	-	Vehicle apparently could have operated indefinitely.	Sfc	CI WC S	15 38 Complete	100	-	-	-	-	-	-	-	-	-	-	-	Soil with moisture content of 38% did not stick to tires enough to cause immobilization.
13	Dike Area (3)	16	Chains, single front, tandem rear.	40	After 40 passes vehicle showed no sign of becoming immobilized.	Sfc	CI WC S	49 37 Complete	100	-	-	-	40	-	-	-	-	-	-	-	Soil with moisture content of 37% did not stick to chains enough to cause immobilization.
14	Borrow Pit (3)	16	None	40	No sign of vehicle becoming immobilized.	Sfc	CI WC S	29 46 Complete	100	-	-	-	40	2	-	-	-	-	-	-	Soil with moisture content of 46% did not stick to tires enough to cause immobilization.

NOTES: (1) CI - Cone index (no units) WC - Water content (% dry wt) D - Density (lbs/cu ft) S - Stickiness (no units) Sfc - Surface.
(2) Reading less than 1000.
(3) Tests conducted to determine stickiness of soil.

TABLE 5

SUMMARY OF TRAFFIC TESTS
WEASEL, M29C, - RIFLE RANGE SITE

Vehicle: Gross Weight 5,840 Pounds
Nominal Contact Pressure 1.6 PSI

Soil: Clayey Silt, C.E. Class. ML, PRA Class.A-4
Liquid Limit 39, Plasticity Index 14

Operation				Remarks	Before Traffic Data							During Traffic Data									
							Depth in Inches							Cone Index							
Test No.	Lane	Passes Completed	Reason for Discontinuing Traffic		Depth Process Inches	Test[1]	0	6	12	18	24	Passes	Depth Rut Inches	Before Traffic	In Ruts	3 In. Below Ruts	Moisture in Ruts	Density 0-6 In.	Stickiness	Drawbar Pull in Pounds	Analysis
8	6	432	Vehicle stalled on 69th trip due to bogging down and dragging of under carriage. Stalled on 432nd trip due to sticking fast. Tracks could not spin.	After 69th trip M29C straddled its own tracks.	24	CI WC D S	5 37 79 Complete	8 37 79	14 36 77	23 34 82	34 36 79	28 69 432	5 7 10	7 9 12	20 31 7	12 18 9	33 29 37	85 88 84	Complete Complete -	3800	Weasel was able to operate 69 passes in one set of tracks on material with cone index in the range of 20 to 30. By spreading traffic 432 passes were made. Traffic reduced cone index and vehicle was immobilized at a value of 7 to 9.
21	Turn-a-round	7	Mud caked between treads and bottom of body. Mud caked in rear between treads and mud guards. Vehicle over heated on 8th trip around course.	Stickiness test on turnaround.	-	CI WC D S	57 27 Complete	-	-	-	-	8	-	-	-	-	-	-	-	-	Vehicle immobilized from soil caking between treads and body. Moisture content was 2% above the plastic limit.
22	Turn-a-round	-	Vehicle could have continued to operate indefinitely.	Water content was so high that mud would not collect on treads or under fenders.	-	CI WC D S	36 36 Complete	-	-	-	-	-	-	-	-	-	-	-	-	-	Soil with moisture content 11% above plastic limit (only 3% below liquid limit) would not adhere to tracks.
12	5	0	Vehicle immobilized on first pass due to lack of flotation in deep mud.	-	24	CI WC D S	2 39 81 Complete	5 38 81	12 34 83	17 34 84	48 31 85	0	-	-	-	-	-	-	-	-	Weasel will not operate where material has cone index of 2 to 5 in the top 6 inches.
13	5	8	Vehicle immobilized on 9th pass due to accumulation of mud between tracks and mud guards. Removing mud guards did not enable vehicle to travel.	Lane allowed to dry four days. Vehicle then able to make 8 trips.	24	CI WC D S	2 39 81	5 38 81	12 34 83	17 34 84	48 31 85	8	7	6	3	6	-	-	-	-	Weasel operated 8 trips on material with cone index of 3 to 6.
16-A	5	27	Vehicle immobilized by mud clogging up sprockets and sticking between tracks and mud guards.	With mud guards and fenders.	24	CI WC D S	6 33 84 Complete	6	9	26	98	10 27	- 8	- 7	15 15	9 12	- 32	- 86	- Complete	-	Material with cone index around 10 to 15 furnished support for 27 passes of the weasel. Soil with moisture content 7% above plastic limit was picked up by tracks and caused immobilization.
16-B	5	100	Mud accumulated in bogie and in drive sprocket, but rolled off. Vehicle could have continued to operate indefinitely.	Without mud guards or fenders.	24	CI WC D S	6 33 84 Complete	6	9	26	98	100	-	-	17	15	33	84	Complete	-	Material with cone index of 15 to 17 furnished adequate support for 100 passes. Without mudguards or fender soil with moisture content 8% above plastic limit did not cause immobilization.
17	4	100	Evident M29C could have continued to operate indefinitely.	Without mud guards or fenders.	24	CI	3	8	12	15	90	100	10	10	8	8	36	-	-	-	Material with cone index of 8 furnished adequate support for 100 passes. Soil with moisture content 11% above plastic limit did not cause immobilization.
18	4	3	Immobilization on 4th pass due to mud piling up in front of belly pan and accumulating between tracks and under fenders.	With mud guards and fenders.	24	CI	-	-	30	120	150	3	11	-	2	4	38	-	Complete	-	Material with cone index of 2 to 4 was adequate for 3 passes of the weasel.

NOTES: (1) CI - Cone index (no units) WC - Water content (% dry wt) D - Density (lbs/cu ft) S - Stickiness (no units).

TABLE 6

SUMMARY OF TRAFFIC TESTS
WEASEL, M29C, - MOUND SITE

Vehicle: Gross Weight 5,840 Pounds
Nominal Contact Pressure 1.6 PSI

Soil: Buckshot clay, C.E. Class. CH, PRA Class A-6
Liquid Limit 62, Plasticity Index 38

Operation				Remarks	Soil	Before Traffic Data							During Traffic Data									
							Depth in Inches								Cone Index							
Test No.	Lane	Passes Completed	Reason for Discontinuing Traffic		Depth Process Inches	Test[1]	0	6	12	18	24	Passes	Depth Rut Inches	Before Traffic	In Ruts	3 In. Below Ruts	Moisture in Ruts	Density 0-6 In.	Stickiness	Drawbar Pull in Pounds	Analysis
10	5	200	Evident vehicle could have operated indefinitely.	Vehicle operating with mud guards and fenders attached.	18	CI	12	21	27	33	98	20	1	14							Material with cone index of 25 was adequate for more than 200 passes. Moisture content of 41% caused no trouble from stickiness.
						WC	41	40	42	45		100	2	15							
						D	76	76	76	75		200	2	15	25	25	41	76	Some	2300	
						S	Complete														
21	6	4	Vehicle immobilized due to stickiness and deep rutting. Belly guard was dragging. Track rollers and rear sprockets were completely jammed with mud.	Vehicle operating without mud guards, 3 trips in low gear, high range. One trip in low gear, low range.	12	CI	3	9	16	60	-	4	7	-	-	-	52	-	Complete	None taken	Material with cone index of 3 to 9 in the top 6" was adequate for only 4 passes. Soil with moisture content of 52% caused trouble from stickiness.
						WC	50														
						D	69														
						S	Complete														
5	Turn-a-round	Several Trips	Vehicles operated with difficulty due to soil adhering to track and rollers but was not immobilized. Test stopped as soil was drying out.	Test conducted for stickiness.	Sfc	CI	28	-	-	-	-	-	-	-	-	-	-	-	Some	None taken	Soil with moisture content of 36% caused some trouble from stickiness.
						WC	36														
						S	Some														
15	Turn-a-round	40	Evident vehicle could have continued indefinitely.	Test conducted for stickiness.	Sfc	CI	69	-	-	-	-	-	1	-	-	-	-	-	None	-	Soil with moisture content of 33% caused no trouble from stickiness.
						WC	33														
16	Borrow Pit	2	Immobilized due to stickiness. Mud accumulated between crawlers and mud guards.	Test conducted for stickiness.	Sfc	CI	7	-	-	-	-	-	-	-	-	-	-	-	Complete	-	Soil with moisture content of 50% immobilized vehicle due to stickiness.
						WC	50														
						S	Complete														
17	Borrow Pit	6	Immobilized due to stickiness. Mud accumulated between tracks and bed.	Test conducted for stickiness.	Sfc	CI	17	-	-	-	-	-	-	-	-	-	-	-	Complete	-	Soil with moisture content of 47% immobilized vehicle due to stickiness.
						WC	47														
						S	Complete														

NOTES: (1) CI - Cone index (no units) WC - Water content (% dry wt) D - Density (lbs/cu ft) S - Stickiness (no units) Sfc - Surface.

TABLE 7

SUMMARY OF TRAFFIC TESTS
LVT-4 - RIFLE RANGE SITE

Vehicle: Gross Weight 33,800 Pounds
Nominal Contact Pressure 7.2 PSI

Soil: Clayey Silt, C.E. Class. ML, PRA Class A-4
Liquid Limit 39, Plasticity Index 14

Operation				Remarks	Soil	Before Traffic Data						During Traffic Data										
							Depth in Inches							Cone Index								
Test No.	Lane	Passes Completed	Reason for Discontinuing Traffic		Depth Process Inches	Test[1]	0	6	12	18	24	Passes	Depth Rut Inches	Before Traffic	In Ruts	3 In. Below Ruts	Moisture in Ruts	Density 0-6 In.	Stickiness	Drawbar Pull in Pounds	Analysis
25	9	1	Not immobilized. Drawbar test only.	6% Slope	12	CI WC D S	46 26 93 Some	83	110			1	2	60	52	80	25	95	Some	21,300	LVT-4 developed greater drawbar pull on level than on slope.
26	9	1	Not immobilized. Drawbar test only.	Level section	12	CI WC D S	38 24 92 Some	75	112			1	2	50	60	95	23	97	Some	22,600	
24	2	20	LVT-4 easily made 20th pass and evidently could have continued indefinitely.	None	12	CI WC D S	5 34 80 Complete	25	110			20	12	12	19	46	27	89	Complete	14,000	LVT-4 operated 20 passes on soil with a cone index of about 45.
20	7	5	LVT-4 stuck due to deep rutting.	Treads spun but belly was bouyed so that no movement was effected.	24	CI WC D S	60 34 - Complete	30 34 -	27 34 84	36 36 80	42 36 81	5	-	-	-	-	-	-	Complete	-	LVT-4 operated only 5 passes on soil with cone index in the range of 30 even though the surface value was 60.
31	7	100	LVT-4 traveling with ease on 100th trip and evidently could have continued indefinitely.	None	24	CI WC D S	70 28 91 Some	39	36	42	42	100	14	36	37	38	28	92	Some	26,000	LVT-4 operated 100 passes on soil with a cone index of about 40.
21	Turn-a-round	See Note 2	Evident LVT-4 could operate indefinitely.	Grousers were deeper than thickness of mud.	Sfc	CI WC - S	57 27 - Some	-	-	-	-	-	-	-	-	-	-	-	Some	-	Soil was picked up by treads but did not accumulate or cause binding.
22	Turn-a-round	See Note 2	Evident LVT-4 could have operated indefinitely.	Grousers soon cut into dry subsoil.	Sfc	CI WC - S	36 36 - Complete	-	-	-	-	-	-	-	-	-	-	-	Complete	-	Soil was picked up by treads but did not accumulate or cause binding.

NOTES: (1) CI - Cone index (no units) WC - Water content (% dry wt) D - Density (lbs/cu ft) S - Stickiness (no units) Sfc - Surface.
(2) Tests conducted to determine stickiness of soil.

TABLE 8

SUMMARY OF TRAFFIC TESTS
LVT-4 - MOUND SITE

Vehicle: Gross Weight 33,800 Pounds
Nominal Contact Pressure 7.2 PSI

Soil: Buckshot Clay, C.E. Class. CH, PRA Class. A-6
Liquid Limit 62, Plasticity Index 38

Operation				Remarks	Soil	Before Traffic Data						During Traffic Data									
							Depth in Inches							Cone Index							
Test No.	Lane	Passes Completed	Reason for Discontinuing Traffic		Depth Process Inches	Test[1]	0	6	12	18	24	Passes	Depth Rut Inches	Before Traffic	In Ruts	3 In. Below Ruts	Moisture in Ruts	Density 0-6 In.	Stickiness	Drawbar Pull in Pounds	Analysis
4	1	500	Evident test could have continued indefinitely.	Rutting not increasing	24	CI WC D S	25	90	52	48	54	20 200 500	4 6 9	60 90 72	47 63 90	62 68 80	35 - 34	83 - 86	Some - Some		LVT-4 operated 200 passes on material with a cone index of about 50 to 70.
7	Turn-a-round	-	Not immobilized. Surface stickiness not sufficient. Grousers cut to dry ground.	See Note 2	Sfc	CI WC S	28 36 - Complete	-	-	-	-	-	-	-	-	-	-	-	Complete	29,300	Soil with moisture content of 36% did not immobilize vehicle by stickiness.
18	Bor-row Pit	50	Evident test could have continued indefinitely.	Crawlers picked up considerable mud. See Note 2	Sfc	CI WC D S	20 42 - Complete	-	-	-	-	-	-	-	-	-	-	-	-	21,400	Soil with moisture content of 42% did not immobilize vehicle by stickiness.
19	Bor-row Pit	20	Evident test could have continued indefinitely.	Crawlers picked up considerable mud. See Note 2	Sfc	CI WC D S	24 43 - Complete	-	-	-	-	-	-	-	-	-	-	-	-	-	Soil with moisture content of 43% did not immobilize vehicle by stickiness.
3	4	3	Immobilized due to sinkage.	Would probably have been immobilized due to stickiness in a few more trips.	12	CI WC D S	10 46 72 Complete	21 46 72	29 44 74	53 42 75	-	1 3	9 12	25 29	23	22	-	-	Complete	13,400	Soil with cone index of 20 to 25 was adequate for only 3 passes of the LVT-4.
23	6	0	Immobilized first pass.	Mud filled tracks.	12	CI WC D S	6 50 70 Complete	15	20	120	-	1	15	70	88	100	39	81	Complete	-	Soil with cone index of less than 20 in top 12 inches not adequate even though material with a high cone index was present at a depth of 15 inches.
28	11	-	Drawbar tests only.	Level ground. 5% Slope.	6	CI WC D S	21 27 83 None	78	-	-	-	-	-	-	-	-	-	-	None	23,000 Low gear 20,000 Low gear	Drawbar pull is less on slope than on level in each case.
29	8	1	Immobilized due to sinkage and stickiness.	Vehicle stuck on first pass. 2 inches water added enabled to make one pass.	8	CI WC D S	8 46 71 Complete	15	22	100	-	1	18	85	55	68	41	78	Some	15,000	Soil with cone index of 15 to 22 to depth of 12 inches not adequate. Free water on surface decreased drag between soil and belly considerably.

NOTES: (1) CI - Cone index (no units) WC - Water content (% dry wt) D - Density (lbs/cu ft) S - Stickiness (no units) Sfc - Surface.
(2) Tests conducted to determine stickiness of soil.

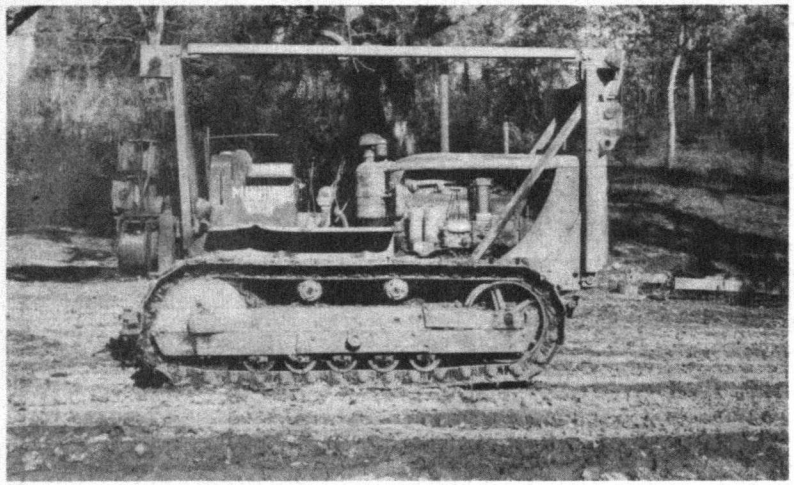

D-7 TRACTOR

M29C "WEASEL"

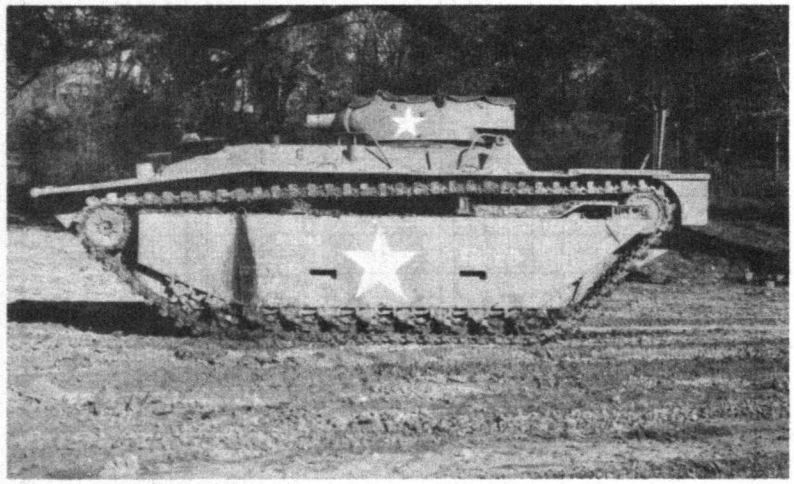

LVT-4

2½ TON CARGO TRUCK

VEHICLES USED IN TEST

PLATE 1

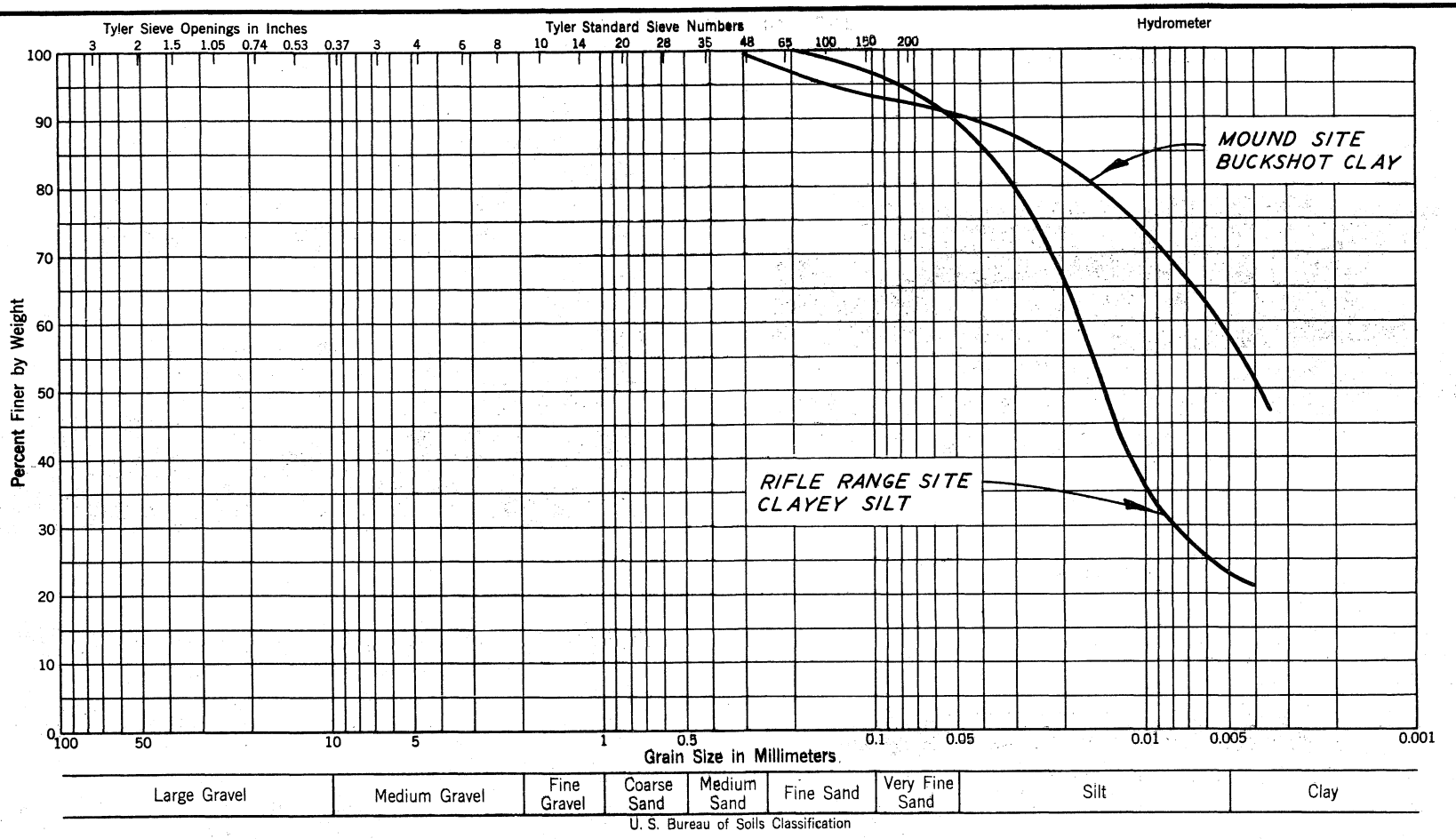

MATERIAL	LIQUID LIMIT	PLASTICITY INDEX	CASAGRANDE CLASSIFICATION	PRA CLASSIFICATION
RIFLE RANGE	39	14	ML	A-4
MOUND	62	38	CH	A-6

CLASSIFICATION OF SOILS

PLATE 2

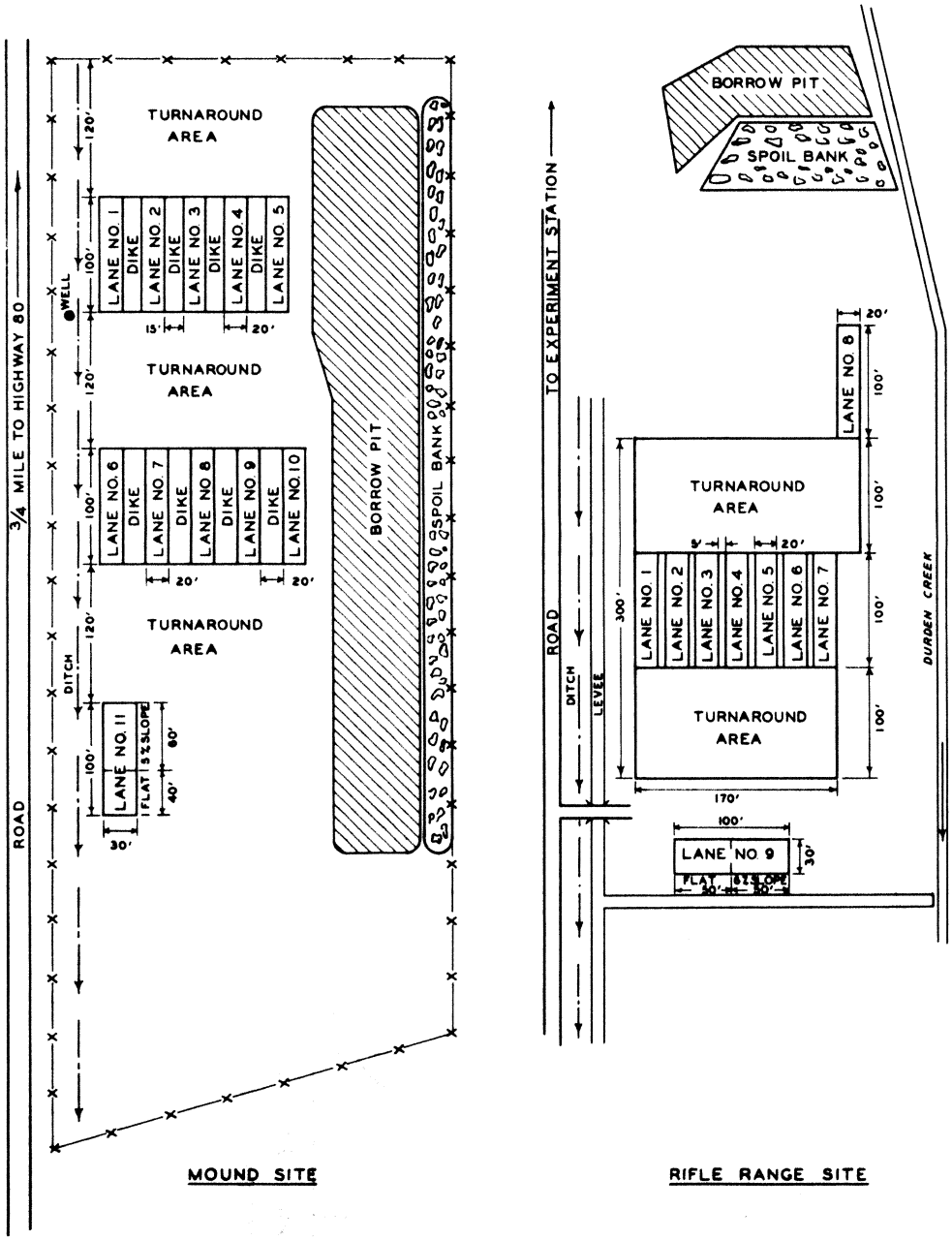

MOUND SITE IS APPROX. 4 MILES WEST OF VICKSBURG BRIDGE ON HWY. 80.
RIFLE RANGE SITE IS APPROX. 3 MILES SO. WEST OF EXPERIMENT STATION.

PLAN OF TEST AREAS
TRAFFICABILITY TESTS—1946

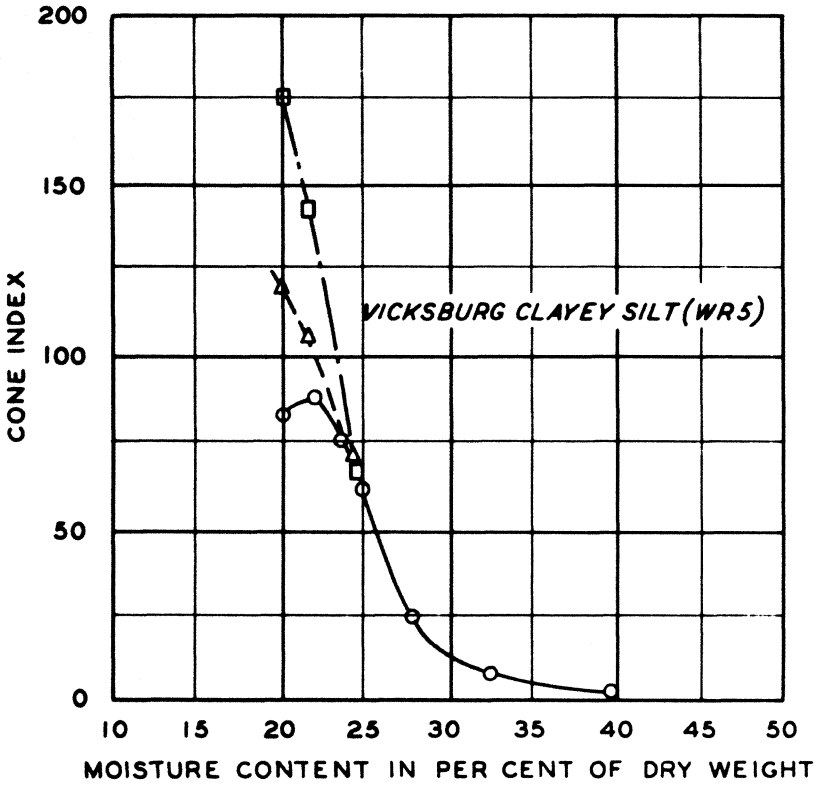

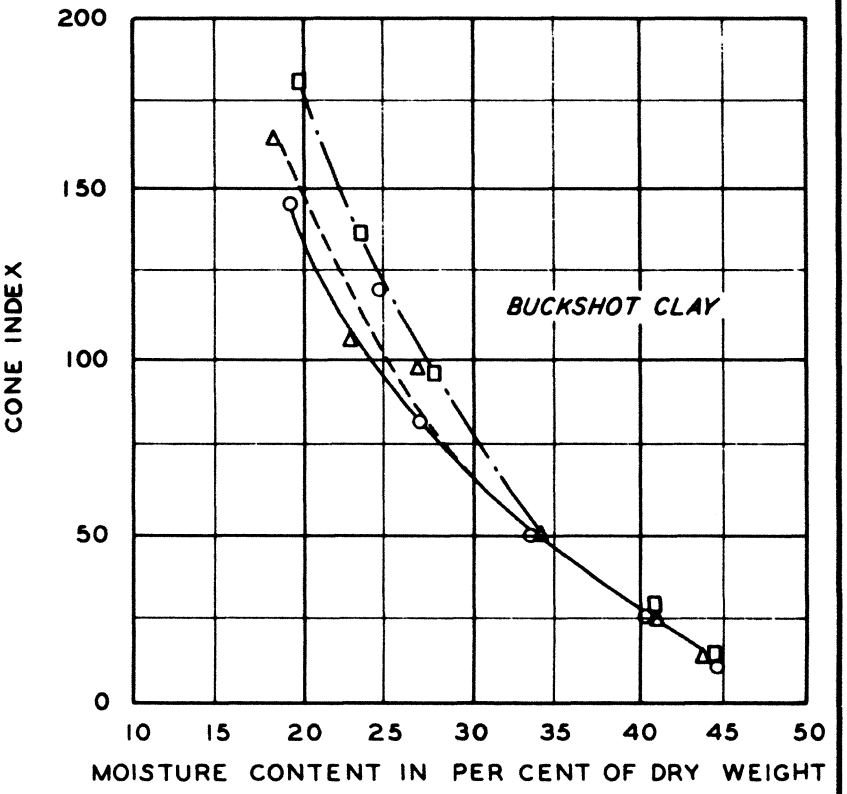

LEGEND

- ○ COMPACTED 20 BLOWS PER LAYER
- △ COMPACTED 35 BLOWS PER LAYER
- □ COMPACTED 60 BLOWS PER LAYER
- X VIBRATED

CONE INDEX VS MOISTURE CONTENT

VICKSBURG CLAYEY SILT (WR5) AND BUCKSHOT CLAY

NOTE: PARTS MARKED V TO BE GROUND AFTER HEAT TREATMENT
LEAVE .007 - .012 FOR GRINDER TO REMOVE.

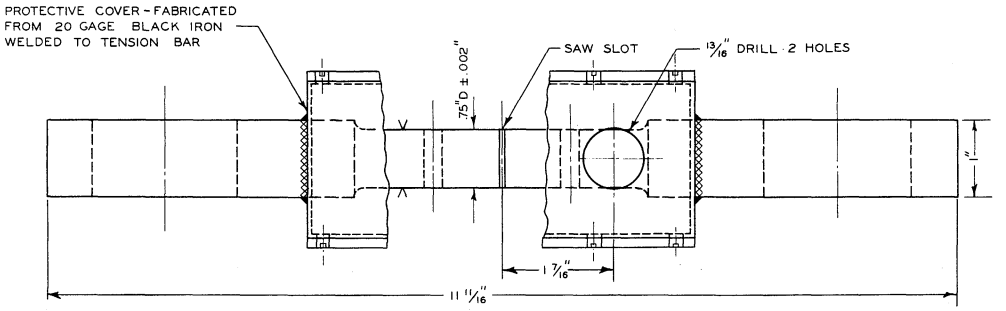

SIDE VIEW

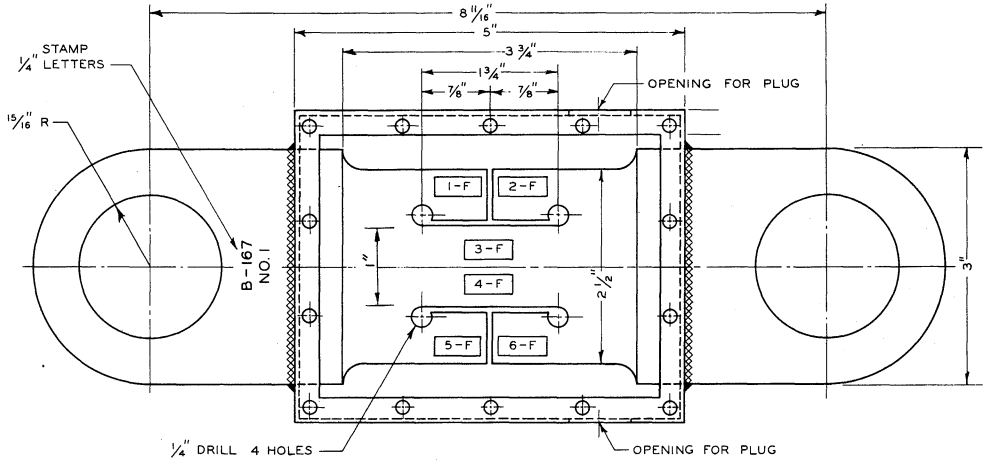

PLAN

COVER REMOVED

NOTE: 1B - 6B ON BACK SIDE DIRECTLY OPPOSITE GAGES 1F - 6F.

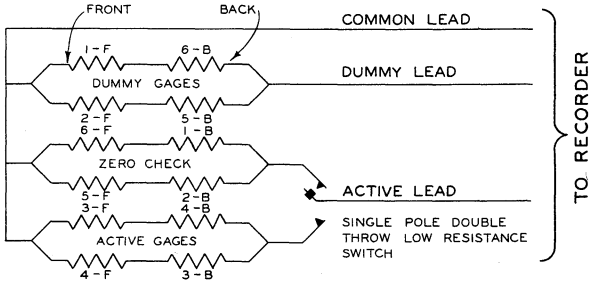

WIRING DIAGRAM

FOR TYPE A (120 OHM) GAGES

SIMILAR DIAGRAM FOR TYPE C (350 OR 500 OHMS) GAGES.

NOTE: ONLY TYPE A (120 OHM) GAGES SHOWN ON PLAN. TYPE C (350 OR 500 OHMS) GAGES MOUNTED ADJACENT TO TYPE A GAGES.

HEAT TREAT AFTER FABRICATION

MATERIAL - TOOL STEEL.

ATLANTA STEEL CO.,
ATLOY NO.2

DETAILS OF 40,000-LB CAPACITY DYNAMOMETER FOR SOILS TRAFFICABILITY TEST

PLATE 5

PLATE 6

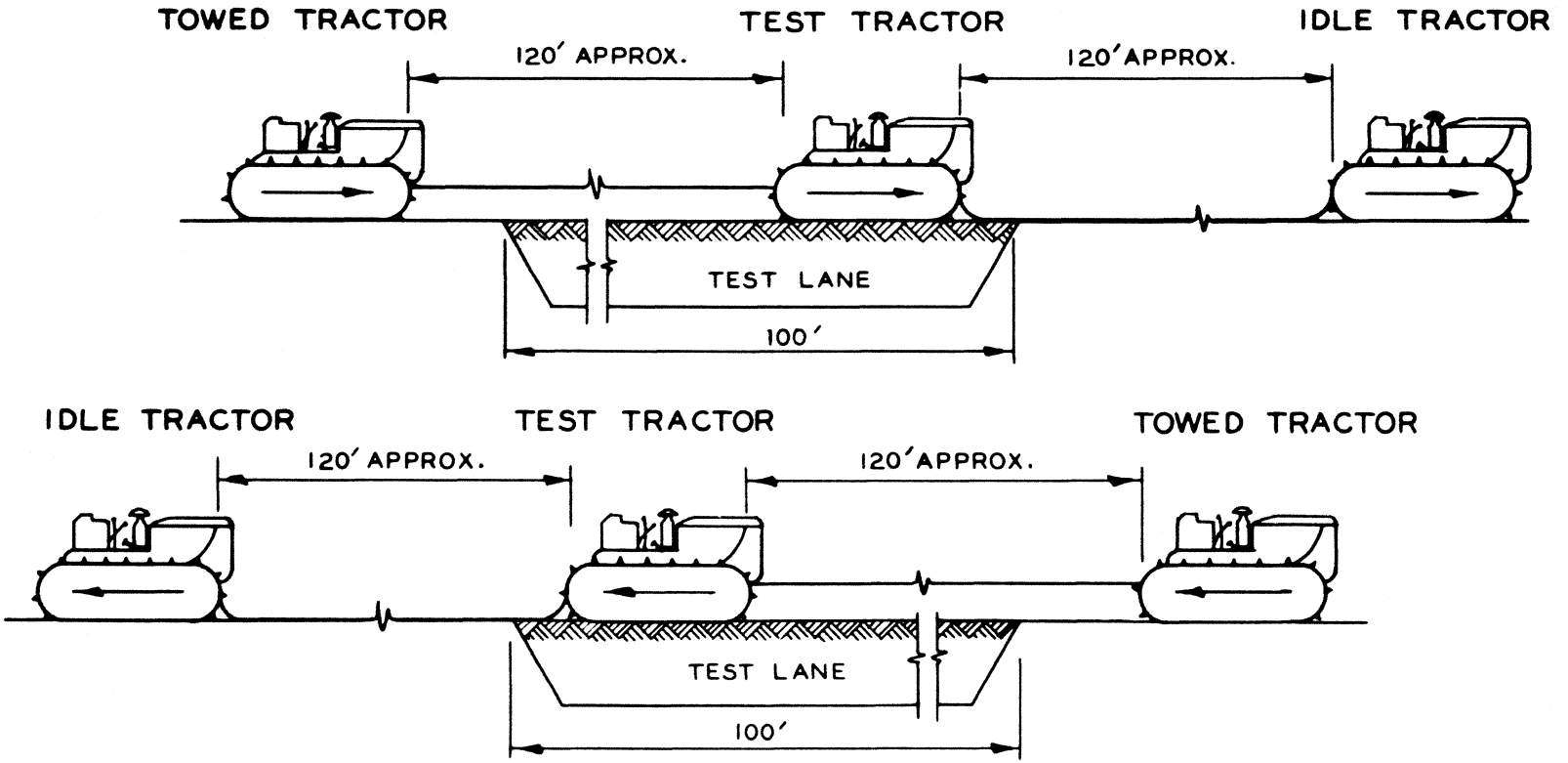

METHOD OF APPLYING TOW LOAD

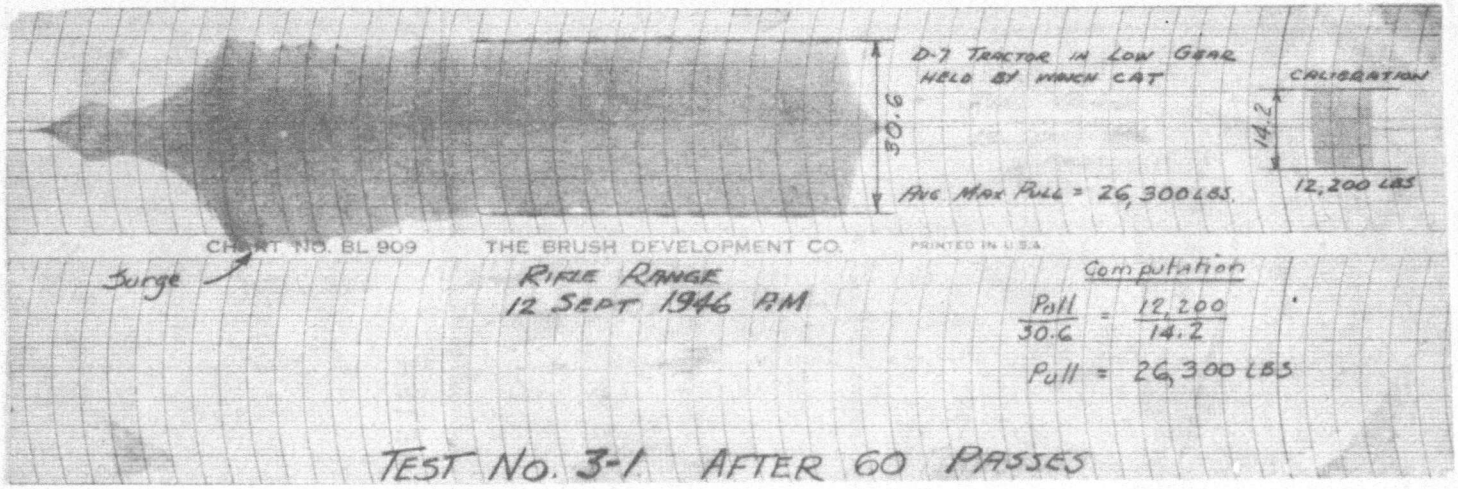

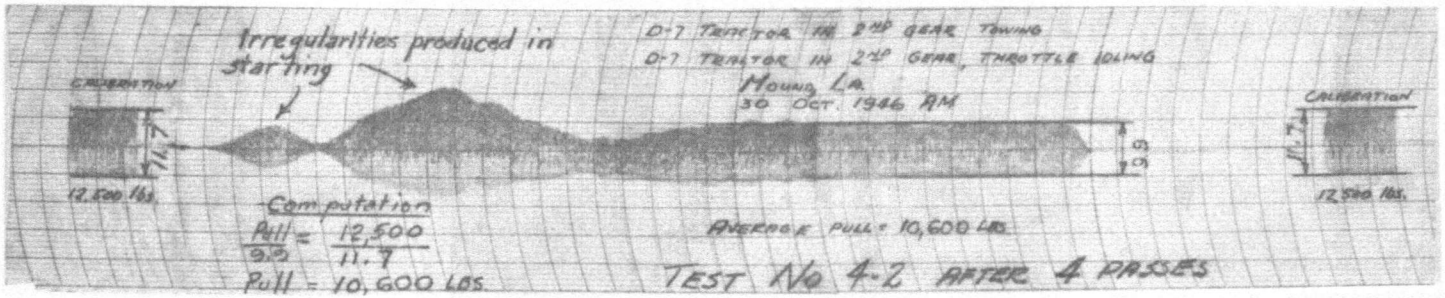

TYPICAL DRAWBAR RECORDS

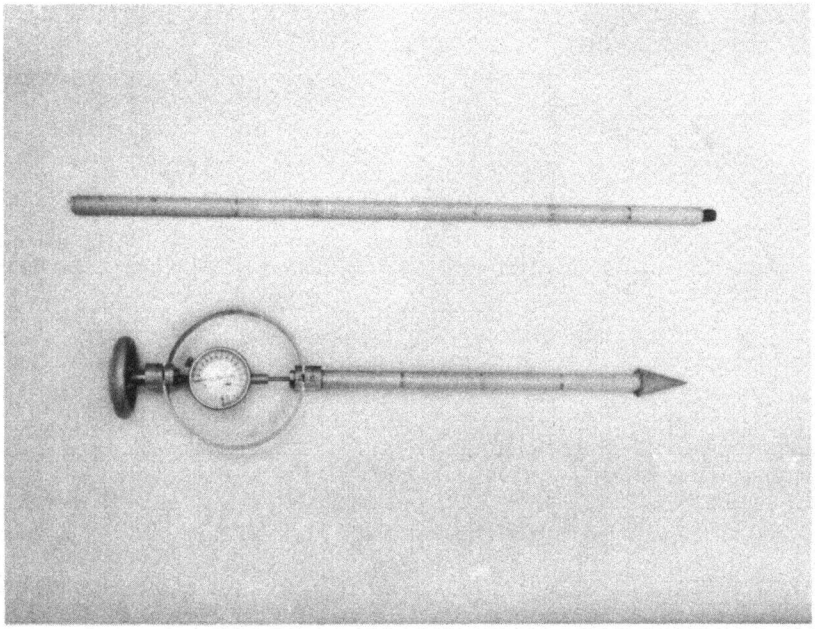

CONE PENETROMETER

PLATE 8

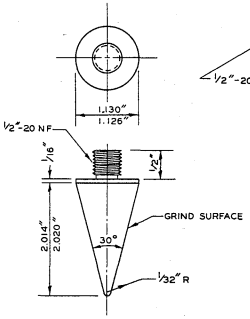

CONE (1)
STAINLESS STEEL 1 REQ.

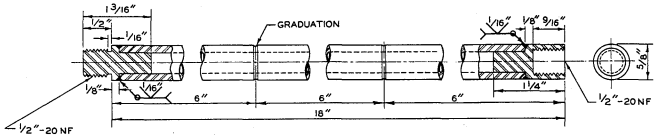

EXTENSION ROD (2)
1 PIPE, C.R. STEEL ADAPTORS 2 REQ.

NOTE: GRADUATIONS 1/16" WIDE X 1/64" DEEP. GRADUATE AT 6" INTERVALS THROUGH ENTIRE 36" LENGTH.

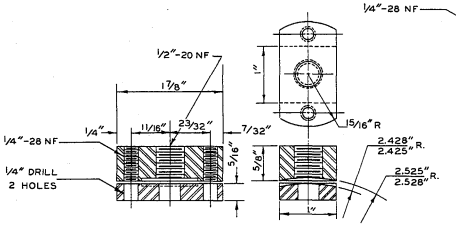

UPPER MOUNTING BLOCK (5)
C.R. STEEL 1 REQ.

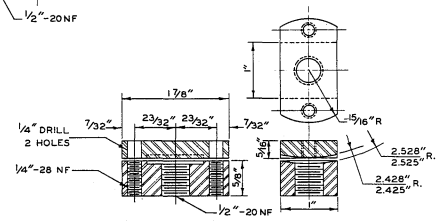

LOWER MOUNTING BLOCK (3)
C.R. STEEL 1 REQ.

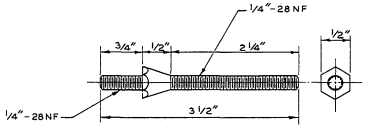

DIAL SUPPORT STUD (6)
C.R. STEEL 1 REQ.

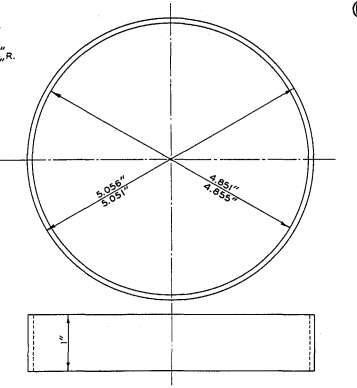

PROVING RING (4)
S.A.E.1066 STEEL 1 REQ.

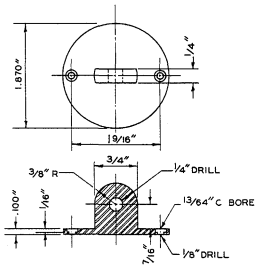

DIAL BACK PLATE (8)
C.R. STEEL 1 REQ.

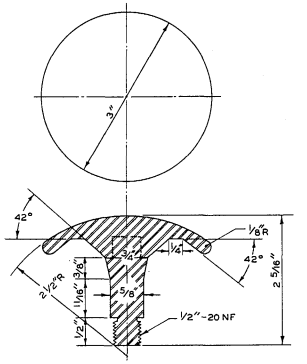

HANDLE (7)
C.R. STEEL 1 REQ.

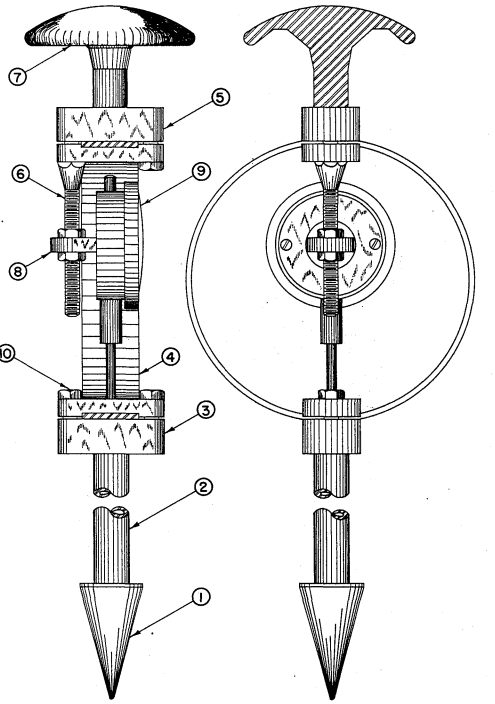

DIAL INDICATOR (9)
AMES NO. 282 OR EQUIV. 1 REQ.

MACHINE BOLTS (10)
1/4"-28 NF, 1" LONG 3 REQ.

WATERWAYS EXPERIMENT STATION

CONE PENETROMETER MODEL-NOVEMBER, 1946

SCALE
0 1 2 3 IN.

DESIGNED BY - O.B. RAY DRAWN BY - P.W. TOMPKINS

JANUARY, 1947

PLATE 9

"NONE"

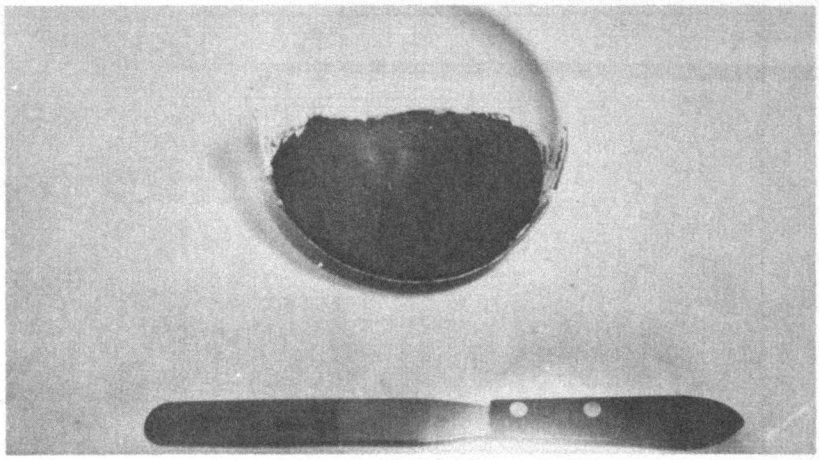

"SOME"

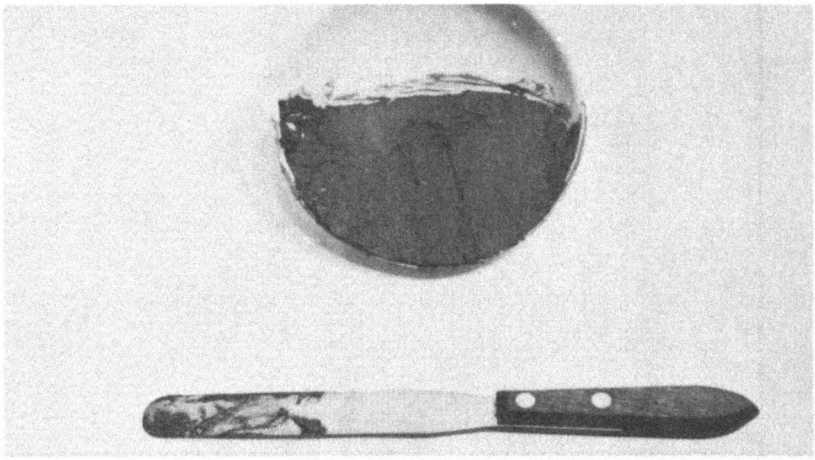

"COMPLETE"

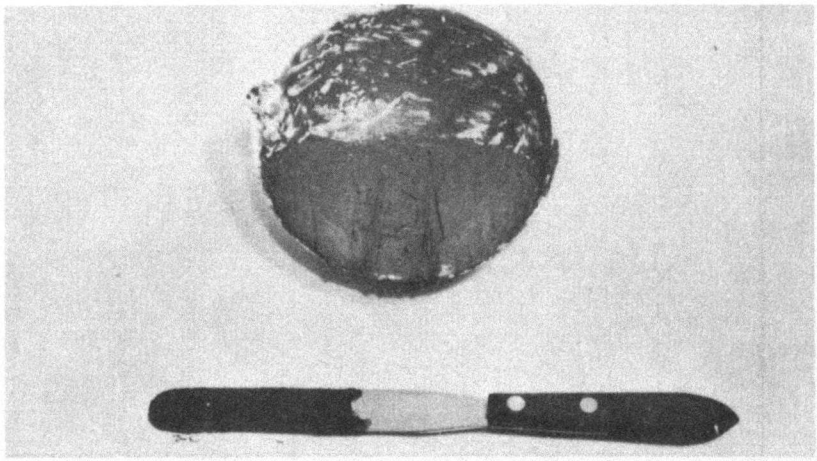

SPATULA STICKINESS

PLATE 10

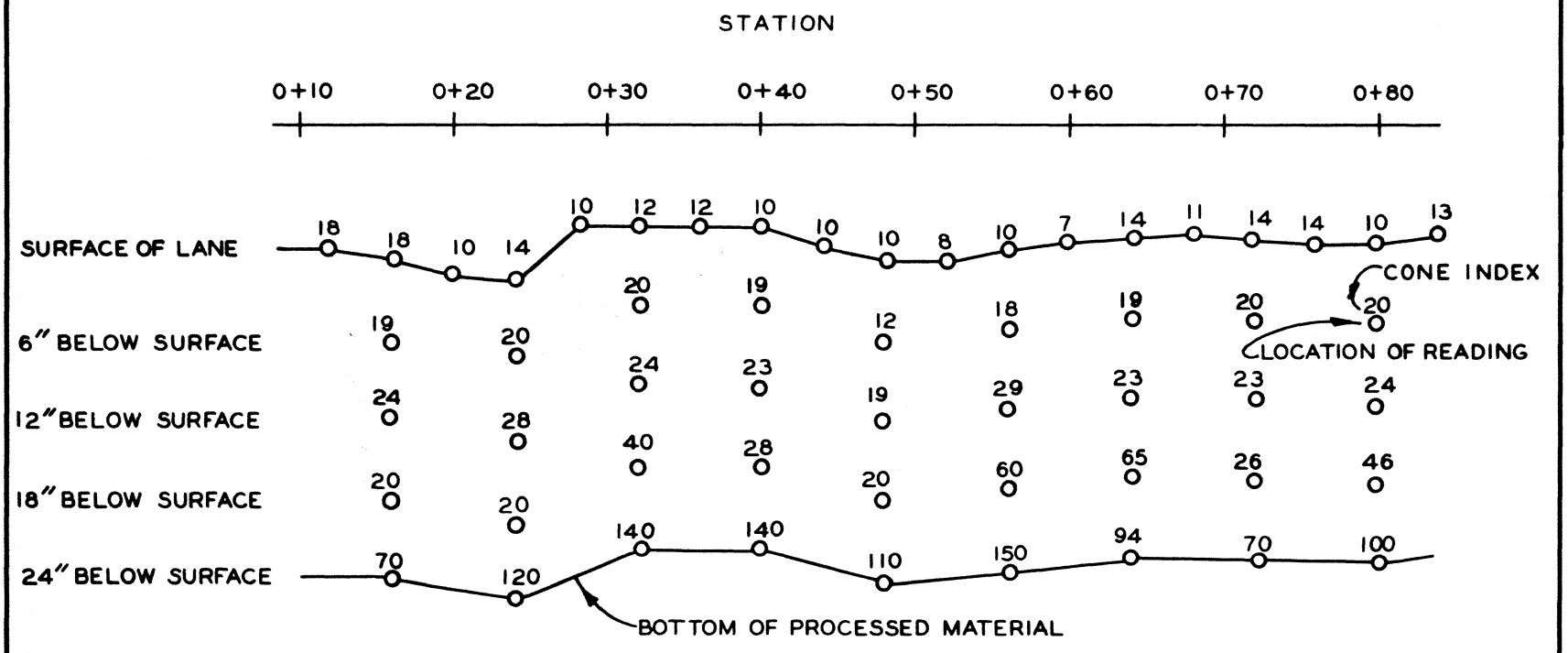

TYPICAL SET OF CONE INDEX VALUES

PLATE II

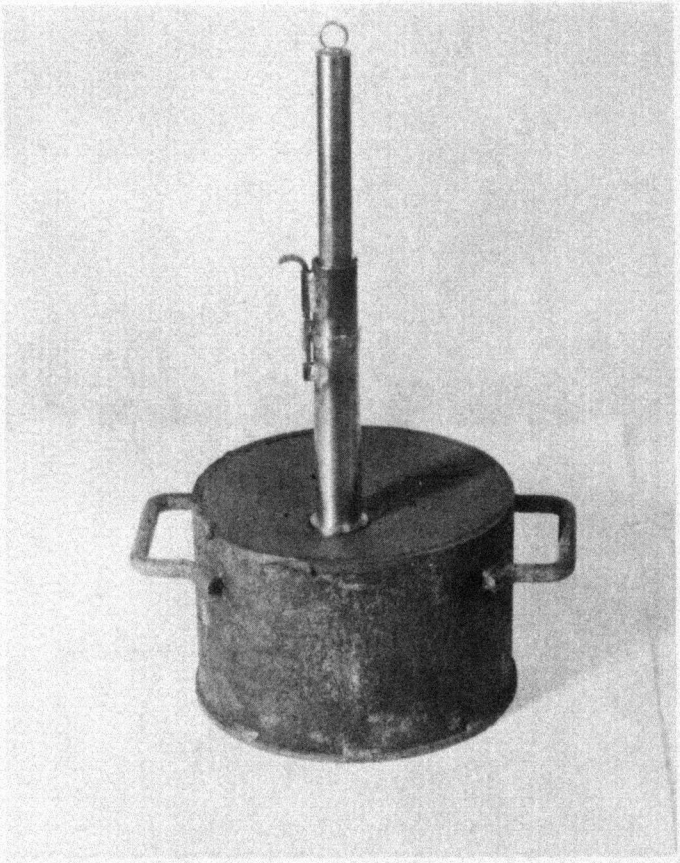

DROP CONE

PLATE 12

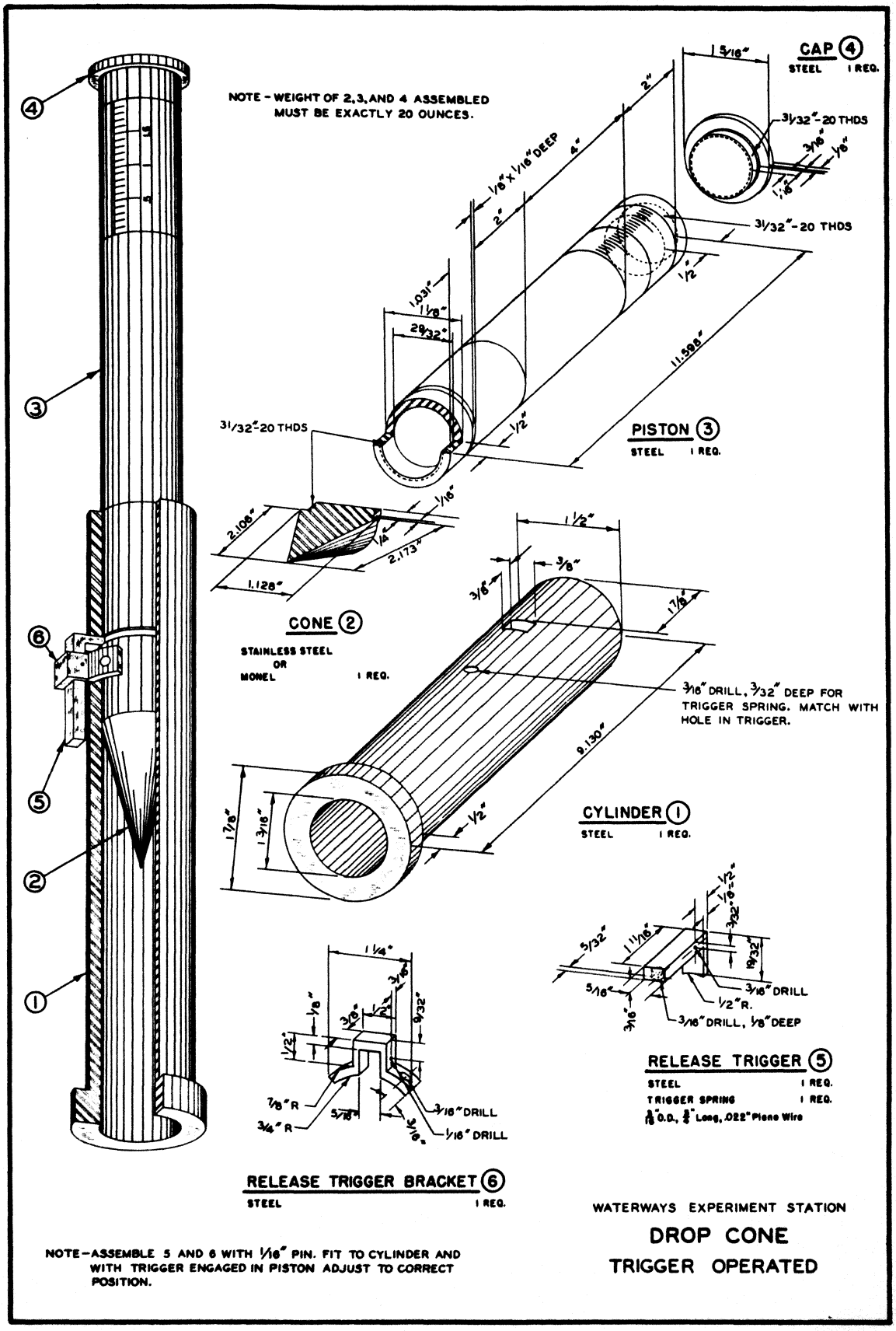
NOTE - WEIGHT OF 2,3, AND 4 ASSEMBLED MUST BE EXACTLY 20 OUNCES.
CAP 4
STEEL 1 REQ.
1 5/16"
2"
3 1/32"-20 THDS
3/16"
1/8"
1/16"
1/8" x 1/16" DEEP
4"
2"
3 1/32"-20 THDS
1/2"
1.031"
1 1/8"
28/32"
11.598"
1/2"
PISTON 3
STEEL 1 REQ.
3 1/32"-20 THDS
2.106"
1/16"
1/4"
2.173"
1.128"
CONE 2
STAINLESS STEEL OR MONEL 1 REQ.
1 1/2"
3/8"
3/8"
1 7/8"
3/16" DRILL, 3/32" DEEP FOR TRIGGER SPRING. MATCH WITH HOLE IN TRIGGER.
9.130"
1 7/8"
1 3/16"
1/2"
CYLINDER 1
STEEL 1 REQ.
1/2"
1/8"
3/32"
5/32"
1 11/16"
19/32"
5/16"
3/16"
3/16" DRILL
1/2" R.
3/16" DRILL, 1/8" DEEP
RELEASE TRIGGER 5
STEEL 1 REQ.
TRIGGER SPRING 1 REQ.
3/16" O.D., 3/4" Long, .022" Piano Wire
1 1/4"
3/16"
1/8"
3/8"
1/2"
9/32"
1/2"
7/8" R
3/4" R
5/16"
3/16" DRILL
1/16" DRILL
RELEASE TRIGGER BRACKET 6
STEEL 1 REQ.
NOTE-ASSEMBLE 5 AND 6 WITH 1/16" PIN. FIT TO CYLINDER AND WITH TRIGGER ENGAGED IN PISTON ADJUST TO CORRECT POSITION.
WATERWAYS EXPERIMENT STATION
DROP CONE
TRIGGER OPERATED

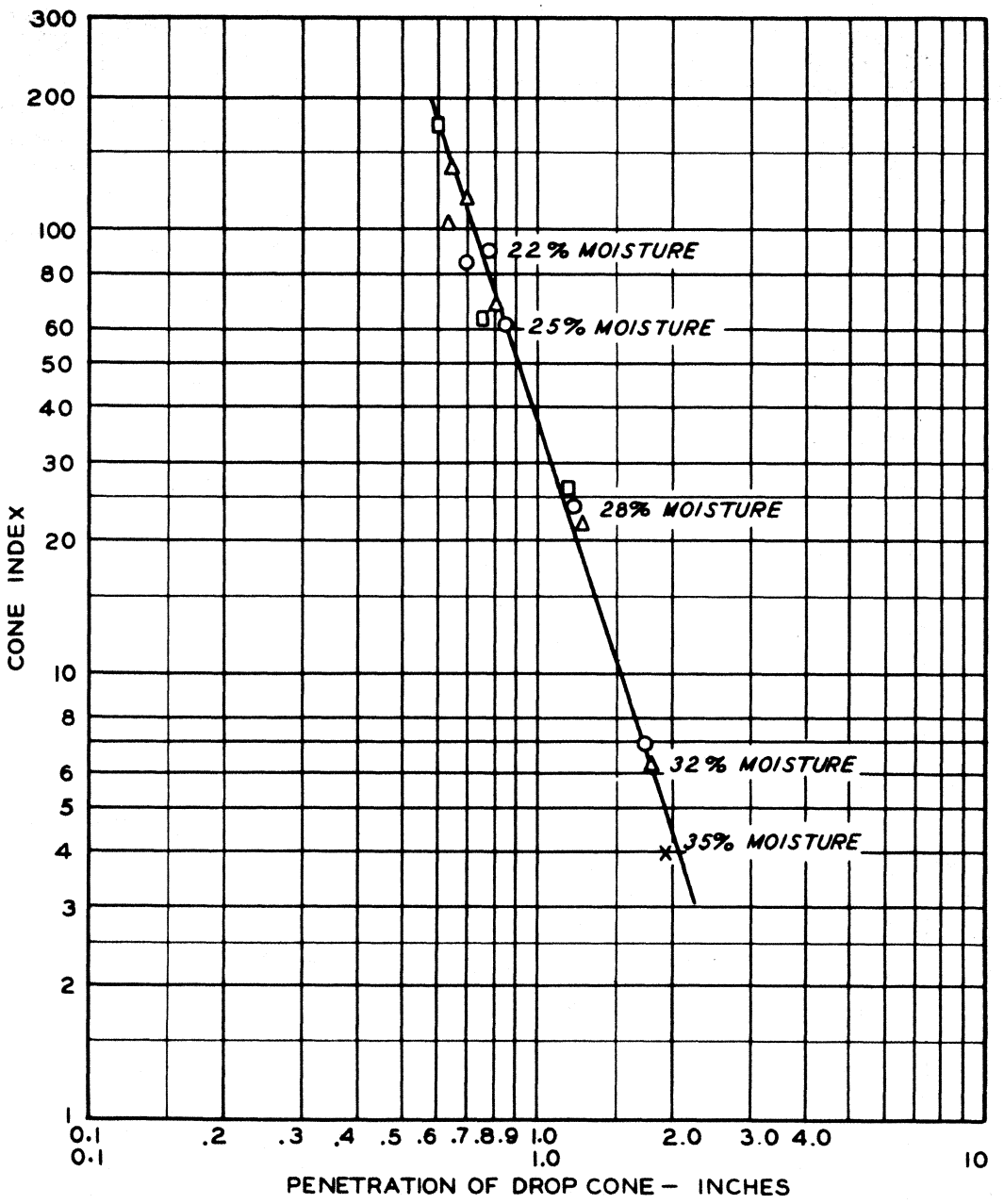

LEGEND

O COMPACTED 20 BLOWS PER LAYER
Δ COMPACTED 35 BLOWS PER LAYER
□ COMPACTED 60 BLOWS PER LAYER
X VIBRATED

CONE INDEX VS PENETRATION WITH DROP CONE

VICKSBURG CLAYEY SILT (WR5)

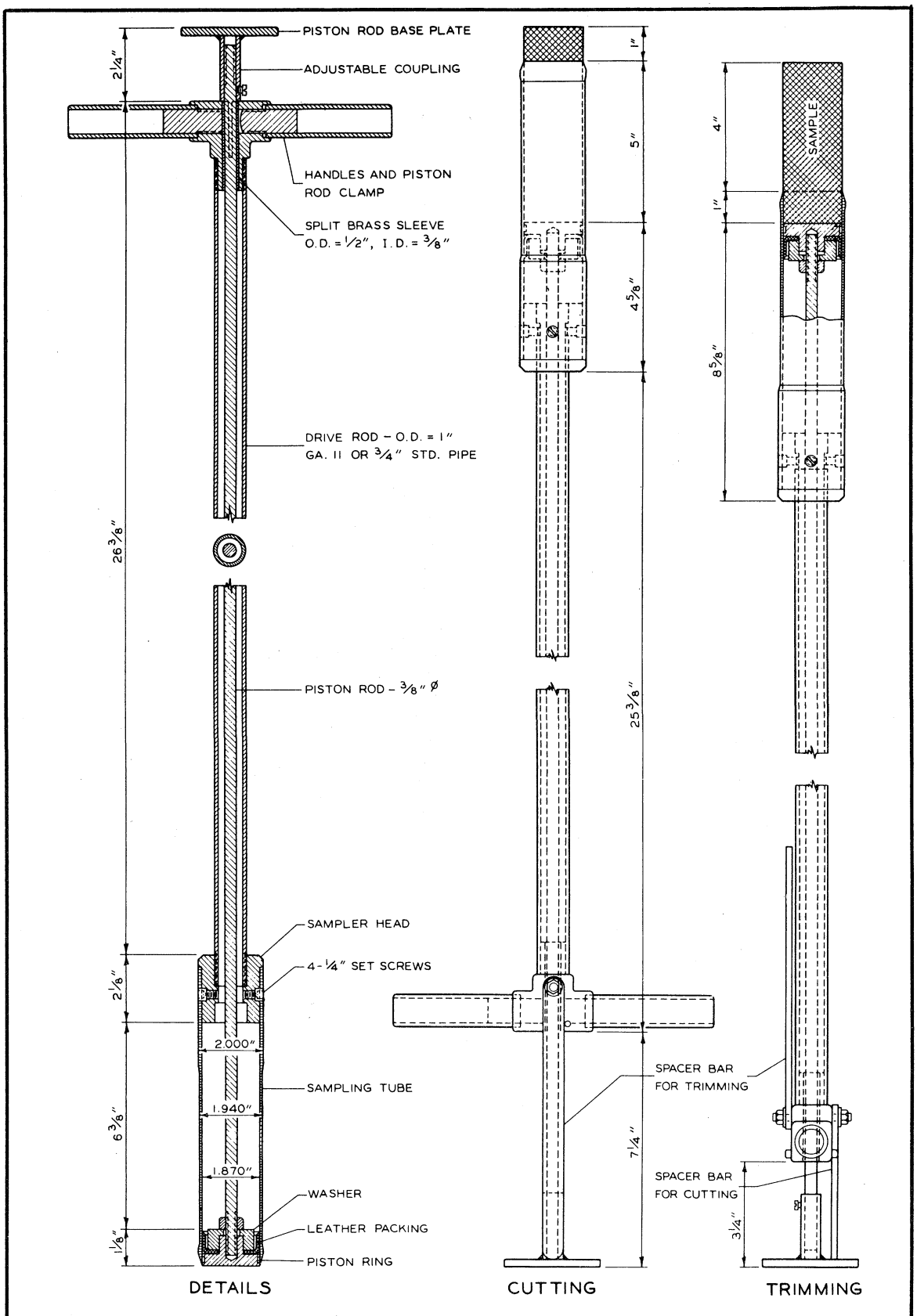

2" PISTON SAMPLER